OWNER'S MANUAL

TOHATSU

Feel the Wind™

Original instructions

EN

MFS 6BZ
MFS 8B
MFS 9.8B

OB No.003-11113-ABB1

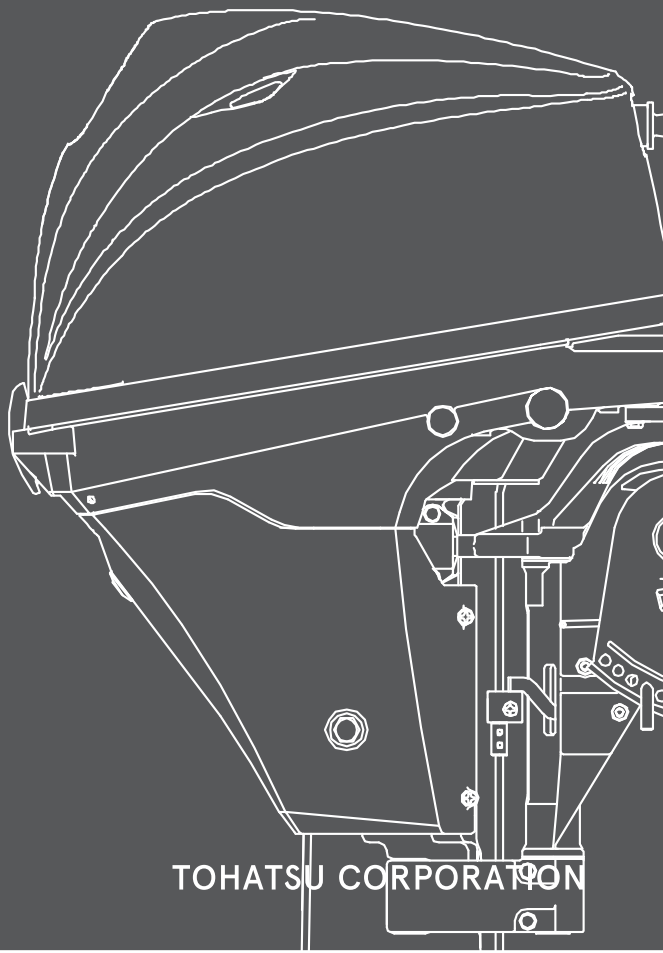

BACKS YOU UP™

TOHATSU CORPORATION

ENOM00001-0

⚠ **READ THIS MANUAL BEFORE USING THE OUTBOARD MOTOR. FAILURE TO FOLLOW THE INSTRUCTIONS AND SAFETY PRECAUTIONS IN THIS MANUAL CAN RESULT IN SERIOUS INJURY OR DEATH. KEEP THIS MANUAL IN A SAFE LOCATION FOR FUTURE REFERENCE.**

Copyright © 2022 Tohatsu Corporation. All rights reserved. No part of this manual may be reproduced or transmitted in any from or by any means without the express written permission of Tohatsu Corporation.

YOUR TOHATSU OUTBOARD MOTOR

ENOM00006-2

To You, Our Customer

Congratulations on your purchase of the TOHATSU outboard motor. You are now the proud owner of an excellent outboard motor that will serve you for many years to come. This owner's manual contains important safety, operational and maintenance information.
The efficiency and longevity of your outboard motor will depend heavily on your operating methods and periodic maintenance. Failure to operate and maintain your outboard motor according to the instruction in this owner's manual may void the limited warranty, as well as reduce the efficiency and reliability of the outboard motor.

Any person operating TOHATSU outboard motor must carefully read and fully understand the entire contents of this manual prior to operation. For safety, follow all safety warnings contained within the owner's manual and the labels applied to your outboard motor. You should keep this owner's manual where accessible while operating your outboard motor. If the outboard motor is resold, make sure the manual is passed on to the next owner. In case you encounter any problems, please contact an authorized TOHATSU service shop or dealer for assistance.

Tohatsu Corporation reserves the right to change, modify, add, or remove a part or whole of the owner’s manual without prior notice and incurring any obligations.

We are excited to take a part in your boating adventures and wish for your great and safe boating experience.

TOHATSU CORPORATION

ENOM00113-1

DECLARATION OF CONFORMITY (DoC)

This product conforms to certain portion of the European Parliament directive and UK Regulations. DoC contains the following information;

- Name and Address of the manufacturer, EU - notified body, EU - authorized representative, and UK - approved body.
- Applied community directives and regulations
- Reference standard
- Description of the product. (model name and serial number)
- Signature of the responsible person (name / title / date and place of issue).

ENOM00002-0

OWNER REGISTRATION AND IDENTIFICATION

Upon purchasing this product, be sure that the WARRANTY CARD is correctly and completely filled out and mailed to the addressee noted there on. This WARRANTY CARD identifies you as the legal owner of the product and serves as your warranty registration.
TO THE EXTENT PERMITTED BY APPLICABLE LAW, YOUR OUTBOARD MOTOR WILL NOT BE COVERED BY THE APPLICABLE LIMITED WARRANTY, IF THIS PROCEDURE IS NOT FOLLOWED.

ENOM00003-1

PRE-DELIVERY INSPECTION

Make sure Pre-delivery inspection has been properly done by authorized TOHATSU dealer before operating your outboard motor.

ENOM00005-1

Serial Number

Your outboard motor has a unique serial number. The serial number is identification of outboard motor and is located on the outboard motor as shown in the figures below. The serial number is required for warranty registration, filing a warranty claim as well as making technical inquiries and may be required for other occasions.Therefore, please write down the serial number and date of purchase in the space below.

Serial Number:

MF/EF model

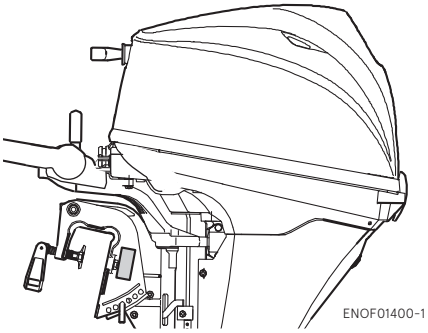

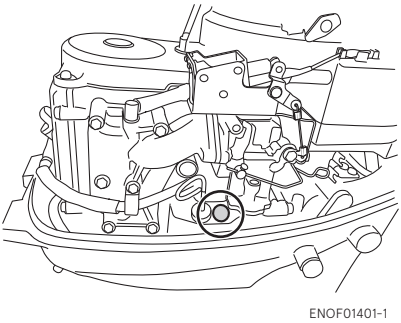

EP/EFT model

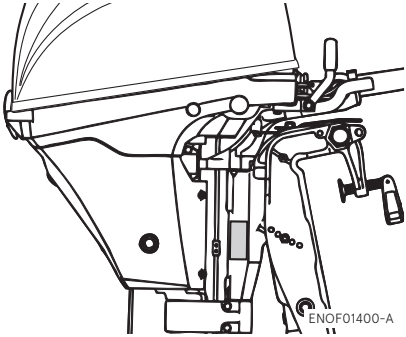

EPT model

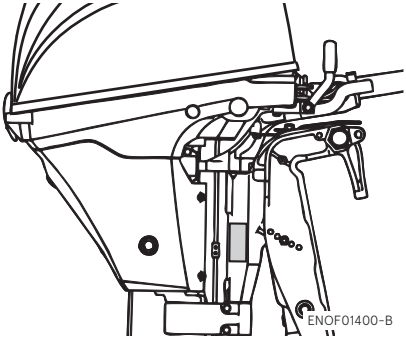

Serial Number: Date of purchase:

ENOM00007-0

NOTICE: DANGER/WARNING/CAUTION/Note

Before installing, operating or otherwise handling your outboard motor, be sure to thoroughly read and understand this Owner's Manual and carefully follow all of the instructions. Of particular importance is information preceded by the words "DANGER," "WARNING," "CAUTION," and "Note." Always pay special attention to such information to ensure safe operation of the outboard motor at all times.

ENOW00001-0

⚠ DANGER

Failure to observe will result in severe personal injury or death, and possibly property damage.

ENOW00002-0

⚠ WARNING

Failure to observe could result in severe personal injury or death, or property damage.

ENOW00003-0

⚠ CAUTION

Failure to observe could result in personal injury or property damage.

ENON00001-0

Note

This instruction provides special information to facilitate the use or maintenance of the outboard motor or to clarify important points.

CONTENTS

1. GENERAL SAFETY INFORMATION 10
2. SPECIFICATIONS 12
3. PARTS NAME 16
4. LABEL LOCATIONS 19
5. INSTALLATION 22
   1. Mounting the outboard motor on boat 22
   2. Battery installation. 24
6. PRE-OPERATING PREPARATIONS 26
   1. Fuel handling 26
   2. Fuel filling 27
   3. Engine oil filling 28
   4. Break-In 30
   5. Warning system 31
7. ENGINE OPERATION 33
   Before starting 33
   1. Fuel feeding 33
   2. Starting the engine 34
   3. Warming up the engine 40
   4. Forward, reverse, and acceleration 41
   5. Stopping the engine 43
   6. Steering 45
   7. Trim angle 45
   8. Tilt up and down 48
   9. Shallow water operation 51
8. REMOVING AND CARRYING THE OUTBOARD MOTOR. 53
   1. Removing the outboard motor 53
   2. Carrying the outboard motor 53
   3. Trailering 54
9. ADJUSTMENT. 56
   1. Steering friction 56
   2. Throttle grip friction 56
   3. Remote control lever friction 57
   4. Trim tab adjustment 57
10. INSPECTION AND MAINTENANCE. 59
   1. Daily Inspection 60
   2. Periodic Inspection 65
   3. Off-season storage 76
   4. Pre-season check 79
   5. Submerged outboard motor 79
   6. Cold weather precautions. 80
   7. Striking underwater object 80
   8. Auxiliary outboard motor operation 80
11. TROUBLESHOOTING 81

12. ACCESSORIES KIT 83
13. PROPELLER TABLE 84

INDEX

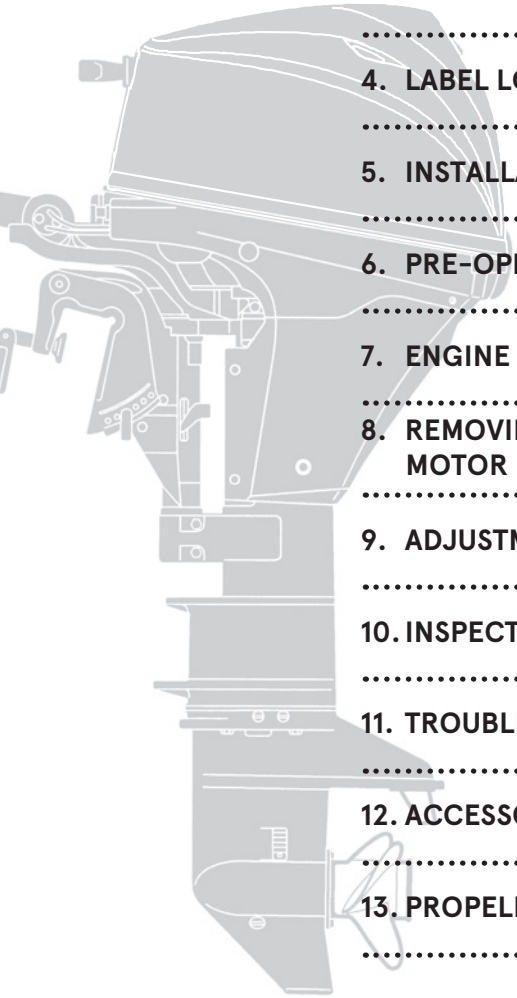

1. GENERAL SAFETY INFORMATION 1
2. SPECIFICATIONS 2
3. PARTS NAME 3
4. LABEL LOCATIONS 4
5. INSTALLATION 5
6. PRE-OPERATING PREPARATIONS 6
7. ENGINE OPERATION 7
8. REMOVING AND CARRYING THE OUTBOARD MOTOR 8
9. ADJUSTMENT 9
10. INSPECTION AND MAINTENANCE 10
11. TROUBLESHOOTING 11
12. ACCESSORIES KIT 12
13. PROPELLER TABLE 13

GENERAL SAFETY INFORMATION

ENOM00009-1

SAFE OPERATION OF BOAT

As the operator/driver of a boat, you are responsible for the safety of those aboard and those in other boat around yours, and for following local boating regulations. You should be thoroughly knowledgeable on how to correctly operate the boat, outboard motor, and accessories. To learn about the correct operation and maintenance of the outboard motor, please read through this manual carefully.
It is very difficult for a person in the water to take evasive action should he or she see a power boat heading in his/her direction, even at a slow speed.
Therefore, when your boat is in the immediate vicinity of people in the water, the outboard motor must be shifted to neutral and shut off.

ENOW00005-0

⚠ WARNING

SERIOUS INJURY IS LIKELY IF A PERSON IN THE WATER MAKES CONTACT WITH A MOVING BOAT, GEAR HOUSING, PROPELLER, OR ANY SOLID DEVICE RIGIDLY ATTACHED TO A BOAT OR GEAR HOUSING.

ENOM00247-1

STOP SWITCH LANYARD

The engine can be stopped by pulling out the stop switch lock from the stop switch. The stop switch lanyard is the coiled red cord with the stop switch lock on one end and a metal clip on the other end. With attaching the stop switch lanyard to the operator's body part or operator’s personal flotation device (PFD), the engine will stop when the stop switch lanyard is being stretched and pulled out the lock from the switch if the operator accidentally falls overboard or leaves from operator’s position. This function may prevent losing control of the boat and minimize or prevent risk of collision with other boats, people and other objects. It is operator’s responsibility to use the stop switch lanyard.

ENOW00004-1

⚠ WARNING

Accidental activation of the Stop Switch (such as the tether being pulled out in heavy seas) could cause passengers to lose their balance and even fall overboard, or it could result in loss of power in heavy seas, strong currents, or high winds. Loss of control while mooring is another potential hazard.
To minimize accidental activation of the Stop Switch, the 500 mm (20 inch.) stop switch lanyard is coiled and can extended to a full 1300 mm (51 inch.).

ENOM00800-A

PERSONAL FLOTATION DEVICE

As the operator/driver and passenger of a boat, you are responsible to wear a PFD (Personal Flotation Device) while on the boat.

ENOM00010-1

SERVICING, REPLACEMENT PARTS & LUBRICANTS

We recommend that only an authorized service shop perform service or maintenance on your outboard motor. Be sure to use genuine parts, genuine lubricants, or recommended lubricants. Be aware that the installation and use of parts not approved by Tohatsu Corporation will void warranty and may lead to unsafe operating conditions.

ENOM00011-1

MAINTENANCE

As the owner of the outboard motor, you should be acquainted with correct maintenance procedures following by maintenance section of this manual (See page 59). It is the operator's responsibility to perform all safety inspections, proper lubrication and to follow all maintenance instructions for safe operation. You should take the engine to an authorized dealer or service shop for periodic inspection at the prescribed intervals.
Correct periodic maintenance and proper care of outboard motor will reduce the chance of problems, limit overall operating expenses and contribute to longevity of your outboard motor.

Carbon Monoxide Poisoning Hazard

Exhaust gas contains carbon monoxide, a colorless and odorless gas which can be fatal if inhaled for any length of time.
Never start or operate the engine indoors or in any space which is not well ventilated.

Gasoline

Gasoline and its vapors are very flammable and can be explosive. Use extreme care when handling gasoline. You should be thoroughly knowledgeable on how to correctly handle gasoline by reading this manual.

SPECIFICATIONS

ENOM00810-A

MODEL FEATURE

Model		F6B			F8B		F9.8B				
Type		MF	EF	EP	MF	EP	MF	EF	EFT	EP	EPT
Transom heights	S	●			●	●	●	●	●	●	●
	L	●	●	●	●	●	●	●	●	●	●
	UL						●		●		●
Tiller Handle		●	●		●		●	●	●		
Remote Control				●		●				●	●
Power Tilt									●		●
Manual tilt		●	●	●	●	●	●	●		●	

ENOM00811-A

MODEL NAME EXAMPLE

F 9.8B EPTL

F	9.8	B	E	P	T	L
Model description	Horse power	Product generation	Starter system	Steering system	Tilt system	Shaft length
F= Four stroke	-	A and up	E= Electrical start M= Manual start	P=Remote control (Pleasure) F=Tiller handle (Fisher)	T= Power trim&tilt G= Gas assist Blank= Manual tilt	S= Short 15 in L= Long 20 in UL= Ultra long 25 in

ENOM00501-0

6BZ (Available in specific region)

Item	MODEL	6BZ		
		MF	EF	EP
Overall Length	mm (in)	975 (38.4)		590 (23.2)
Overall Width	mm (in)	354 (13.9)		320 (12.6)
Overall Height S·L·UL	mm (in)	1050 (41.3) 1177 (46.3) 1304 (51.3)		
Transom Height S·L·UL	mm (in)	435 (17.1) 562 (22.1) 689 (27.1)		
Weight *1	S kg (lb)	37.0 (81.5)	–	
	L kg (lb)	38.0 (84.0)	41.0 (90.5)	
	UL kg (lb)	39.5 (87.0)	–	
Output	kW (ps)	4.4 (6)		
Max. Operating Range	min^{-1} (rpm)	5000–6000		
Idle Speed in Forward Gear	min^{-1} (rpm)	900		
Idle Speed in Neutral Gear	min^{-1} (rpm)	950		
Engine Type		4-Stroke		
Number of Cylinder		2		
Bore × Stroke	mm (in)	55 × 44 (2.17 × 1.73)		
Piston Displacement	cm^3 (Cu in)	209 (12.8)		
Exhaust System		Through hub exhaust		
Cooling System		Water cooling		
Lubrication System		Trochoid pump		
Starting System		Manual	Electric starter motor*2	
Ignition System		Flywheel Magneto C.D. ignition		
Spark Plug		NGK DCPR6E		
Trim Position		6		3
Engine Oil	mL (fl.oz.)	API SH, SJ or SL, SAE 10W-30/40, Approx. 800 (27)		
Gear Oil	mL (fl.oz.)	Genuine Gear Oil or API GL5, SAE #80-90, Approx. 320 (10.8)		
Fuel		Unleaded Regular Gasoline : R+M/2: 87 or higher RON: 91 or higher		
Fuel Tank Capacity	L (US gal)	12 (3.17)		
Gear Reduction Ratio		2.08 (13 : 27)		
Emission Control System		EM (Engine modification)		
Operator Sound Pressure (ICOMIA 39/94) dB (A)		81.5		
Hand Vibration Level (ICOMIA 38/94) m/s^2		2.2		–

Remark: Specifications are subject to change without notice.

*1 With propeller, with battery cable.

*2 With Manual Start

Tohatsu outboard is power rated in accordance with ISO8665 (propeller shaft output).

ENOM00502-0

8B, 9.8B

Item	MODEL	8/9.8B		
		MF	EF	EP
Overall Length	mm (in)	975 (38.4)		590 (23.2)
Overall Width	mm (in)	354 (13.9)		320 (12.6)
Overall Height S·L·UL	mm (in)	1050 (41.3) 1177 (46.3) 1304 (51.3)		
Transom Height S·L·UL	mm (in)	435 (17.1) 562 (22.1) 689 (27.1)		
Weight *1	S kg (lb)	37.0 (81.5)	40.0 (88.0)	
	L kg (lb)	38.0 (84.0)	41.0 (90.5)	
	UL kg (lb)	39.5 (87.0)	42.5 (93.5)	
Output	kW (ps)	8B : 5.9 (8)/9.8B : 7.2 (9.8)		
Max. Operating Range	min^{-1} (rpm)	5000–6000		
Idle Speed in Forward Gear	min^{-1} (rpm)	900		
Idle Speed in Neutral Gear	min^{-1} (rpm)	950		
Engine Type		4-Stroke		
Number of Cylinder		2		
Bore × Stroke	mm (in)	55 × 44 (2.17 × 1.73)		
Piston Displacement	cm^3 (Cu in)	209 (12.8)		
Exhaust System		Through hub exhaust		
Cooling System		Water cooling		
Lubrication System		Trochoid pump		
Starting System		Manual	Electric starter motor*2	
Ignition System		Flywheel Magneto C.D. ignition		
Spark Plug		NGK DCPR6E		
Trim Position		6		3
Engine Oil	mL (fl.oz.)	API SH, SJ or SL, SAE 10W-30/40, Approx. 800 (27)		
Gear Oil	mL (fl.oz.)	Genuine Gear Oil or API GL5, SAE #80-90, Approx. 320 (10.8)		
Fuel		Unleaded Regular Gasoline : R+M/2: 87 or higher RON: 91 or higher		
Fuel Tank Capacity	L (US gal)	12 (3.17)		
Gear Reduction Ratio		2.08 (13 : 27)		
Emission Control System		EM (Engine modification)		
Operator Sound Pressure (ICOMIA 39/94) dB (A)		81.5		
Hand Vibration Level (ICOMIA 38/94) m/s^2		2.2		–

Remark: Specifications are subject to change without notice.

*1 With propeller, with battery cable.

*2 With Manual Start

Tohatsu outboard is power rated in accordance with ISO8665 (propeller shaft output).

ENOM00503-0

8B, 9.8B

Item	MODEL	8/9.8B	
		EFT	EPT
Overall Length	mm (in)	975 (38.4)	590 (23.2)
Overall Width	mm (in)	354 (13.9)	320 (12.6)
Overall Height S·L·UL	mm (in)	1050 (41.3) 1177 (46.3) 1304 (51.3)	
Transom Height S·L·UL	mm (in)	435 (17.1) 562 (22.1) 689 (27.1)	
Weight *1	S kg (lb)	46.5 (102.5)	46.0 (101.4)
	L kg (lb)	47.5 (104.7)	47.0 (103.6)
	UL kg (lb)	49.0 (108)	48.5 (106.9)
Output	kW (ps)	8B : 5.9 (8)/9.8B : 7.2 (9.8)	
Max. Operating Range	min^{-1} (rpm)	5000–6000	
Idle Speed in Forward Gear	min^{-1} (rpm)	900	
Idle Speed in Neutral Gear	min^{-1} (rpm)	950	
Engine Type		4-Stroke	
Number of Cylinder		2	
Bore × Stroke	mm (in)	55 × 44 (2.17 × 1.73)	
Piston Displacement	cm^3 (Cu in)	209 (12.8)	
Exhaust System		Through hub exhaust	
Cooling System		Water cooling	
Lubrication System		Trochoid pump	
Starting System		Electric starter motor*2	
Ignition System		Flywheel Magneto C.D. ignition	
Spark Plug		NGK DCPR6E	
Trim Position		5	
Engine Oil	mL (fl.oz.)	API SH, SJ or SL, SAE 10W-30/40, Approx. 800 (27)	
Gear Oil	mL (fl.oz.)	Genuine Gear Oil or API GL5, SAE #80-90, Approx. 320 (10.8)	
Fuel		Unleaded Regular Gasoline : R+M/2: 87 or higher RON: 91 or higher	
Fuel Tank Capacity	L (US gal)	12 (3.17)	
Gear Reduction Ratio		2.08 (13 : 27)	
Emission Control System		EM (Engine modification)	
Operator Sound Pressure (ICOMIA 39/94) dB (A)		81.5	
Hand Vibration Level (ICOMIA 38/94) m/s^2		2.2	–

Remark: Specifications are subject to change without notice.

*1 With propeller, with battery cable.

*2 With Manual Start

Tohatsu outboard is power rated in accordance with ISO8665 (propeller shaft output).

PARTS NAME

ENOM00820-0

MF, EF, EP

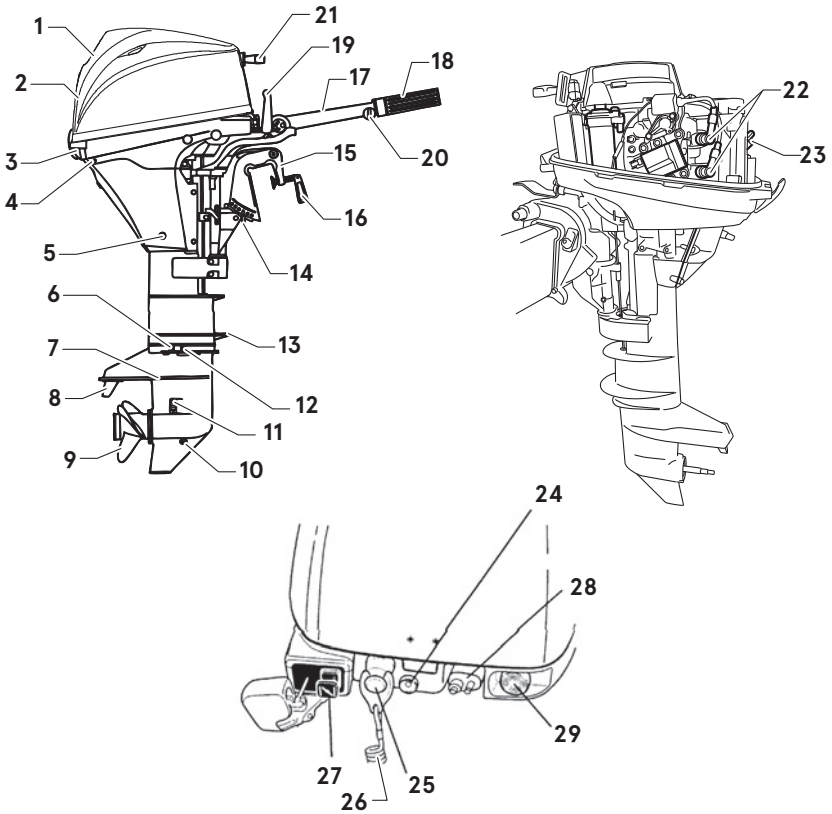

ENOF01402-1

1 Tilt Handle
2 Top Cowl
3 Bottom Cowl
4 Cooling Water Check Port
5 Oil Drain Plug
6 Water Plug
7 Anti-ventilation Plate
8 Trim Tab
9 Propeller
10 Oil Plug (Lower)
11 Cooling Water Inlet
12 Oil Plug (Upper)
13 Splash Plate
14 Thrust Rod
15 Clamp Bracket
16 Clamp Screw
17 Tiller Handle *1
18 Throttle Grip *1
19 Shift Lever *1
20 Throttle Adjust Screw
21 Recoil Starter Handle
22 Spark Plug
23 Oil Filler Cap
24 Warning Lamp
25 Stop Switch *1
26 Stop Switch Lanyard
27 Choke Knob
28 Fuel Connector
29 Starter Switch *2

*1: Tiller handle type only
*2: Electric starter type only

ENOM00020-0

EFT, EPT

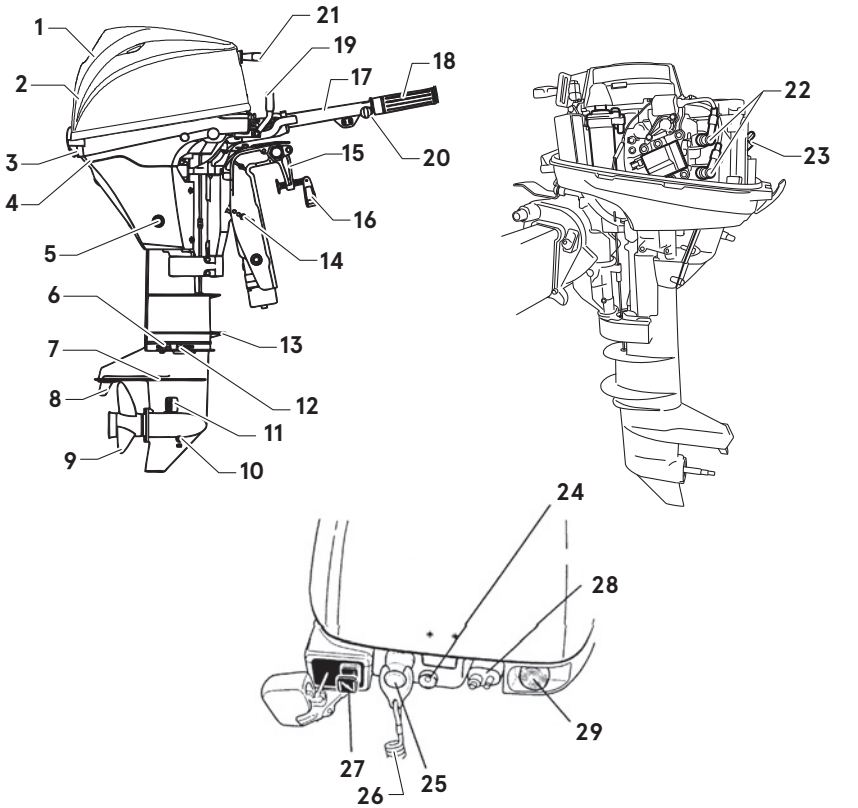

ENOF01403-1

1 Tilt Handle
2 Top Cowl
3 Bottom Cowl
4 Cooling Water Check Port
5 Oil Drain Plug
6 Water Plug
7 Anti-ventilation Plate
8 Trim Tab
9 Propeller
10 Oil Plug (Lower)
11 Cooling Water Inlet
12 Oil Plug (Upper)
13 Splash Plate
14 Trim Lock Pin
15 Clamp Bracket
16 Clamp Screw
17 Tiller Handle *1
18 Throttle Grip *1
19 Shift Lever *1
20 Throttle Adjust Screw
21 Recoil Starter Handle
22 Spark Plug
23 Oil Filler Cap
24 Warning Lamp
25 Stop Switch *1
26 Stop Switch Lanyard
27 Choke Knob
28 Fuel Connector
29 Starter Switch
*1: Tiller handle type only

ENOM00822-0

Remote control box & Fuel tank

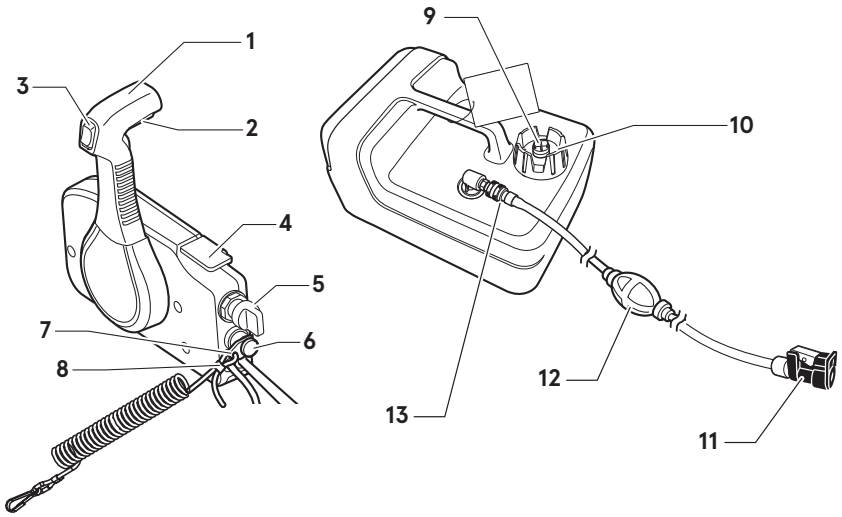

ENOF01404-2

1 Control Lever
2 Neutral lock arm
3 PTT switch
4 Free throttle lever
5 Main switch
6 Stop switch
7 Stop switch lock
8 Stop switch lanyard
9 Air vent screw
10 Fuel tank cap
11 Fuel connector (Engine side)
12 Primer bulb
13 Fuel connector (Fuel tank side)

LABEL LOCATIONS

ENOM00019-A

Warning label locations

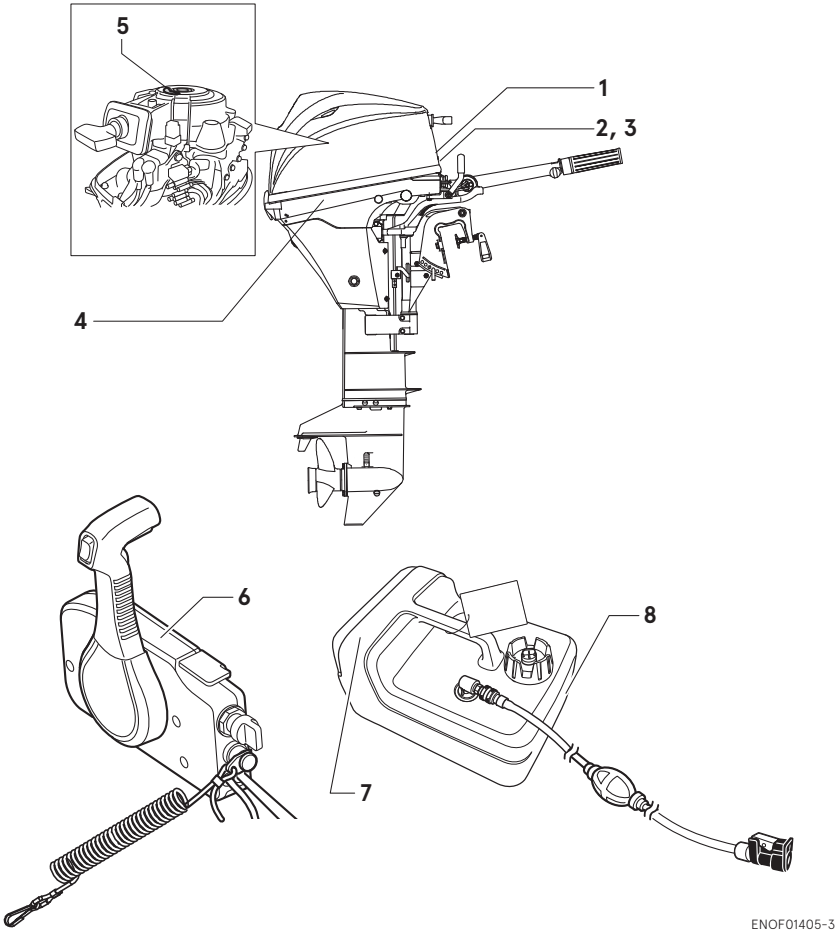

1. Read owner's manual.

ENOF00120-0

2. Oil pressure lamp (See page 31).

ENOF00131-0

3. Engine stop switch (See page 35, 37, 44).

ENOF00131-B

4. When laying down the outboard motor, be sure this decal is facing up.

3H6-67572-1

5-1. Warning regarding starting the engine (See page 34).

5-2. HOT SURFACE

Can cause burns.

Do not touch when operating or immediately after the engine has stopped.

5-3. HAZARD CAUSED BY ROTATING PARTS

Rotating parts can cause severe injury.

Keep hands, feet, hair, and clothing away from all rotating parts to prevent injury.

5-4. ELECTRICAL SHOCK HAZARD

High voltage can cause severe electrical shock.

Do not touch electrical components such as ignition coil or spark plug cord when starting or while the engine is in operation.

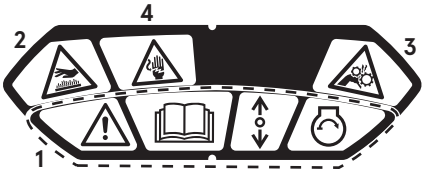

3PA-72181-100

6. Warning regarding engine stop switch.

ENOF00008-1

7. Warning regarding gasoline (See page 27).

ENOF00005-S

8. Warning regarding gasoline (See page 27).

ENOF00005-L

ENOM00019-B

CE label locations

MF/EF model

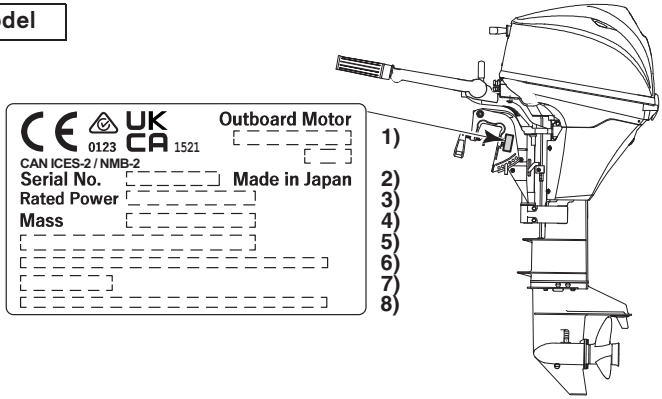

ENOF01406-6

EP/EFT/EPT model

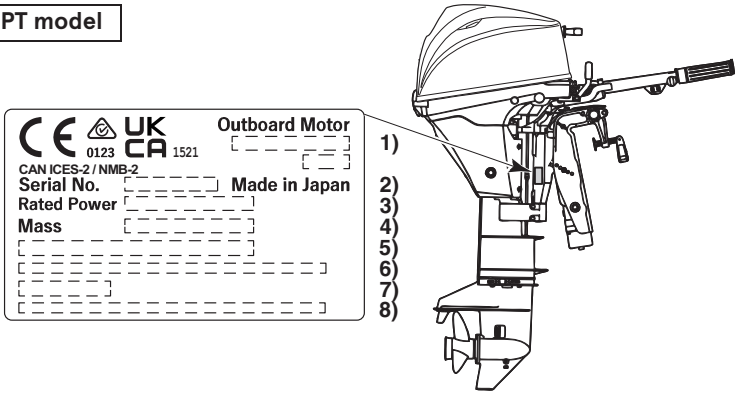

ENOF01406-7

1. Model code (Model name)
2. Serial No.
3. Rated power
4. Dry mass weight(Without propeller, with battery cable)
5. Manufacturer name
6. Manufacturer address
7. Authorised representative
8. Authorised representative address

Description of serial number year code

Last two digits of alphabet represent production year as below.

Year Code	BB	BC	BD	BE	BF
Year of manufacture	2022	2023	2024	2025	2026

INSTALLATION

ENOM00024-B

1. Mounting the outboard motor on boat

ENOW00006-1

⚠ WARNING

Most boats are rated and certified for their maximum allowable horsepower, as shown on the boat's certification plate. Do not equip your boat with an outboard motor that exceeds this limit. If in doubt, contact your dealer.
Do not operate the outboard motor until it has been securely mounted on the boat in accordance with the instructions below.

ENOW00009-2A

⚠ WARNING

- **Mounting the outboard motor without following this manual can lead to unsafe conditions such as poor maneuverability, lack of control or fire.**
- **Loose clamp screws and/or mounting hardware can lead to the release or displacement of the outboard motor, possibly resulting in loss of control and/or serious personal injury. Be sure that fasteners are tightened to the specified torque. Check the fasteners for tightness before operating your outboard.**
- **Be sure to use outboard mounting hardware included in the outboard motor package or their equivalents in terms of size, material, quality and strength.**

Keep the outboard motor in a vertical position when mounting.

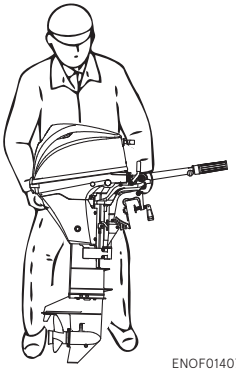

ENOF01407-1

ENOM00025-0

Position ... Above keel line

Place the outboard motor in the center of the boat's transom.

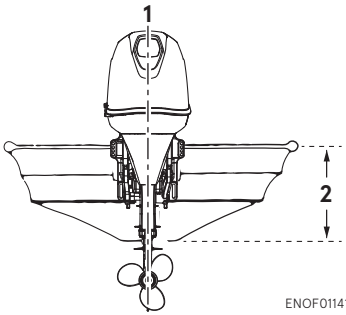

ENOF01141-0

1. Center of boat
2. Boat transom

ENOM00026-0

Transom matching

Be sure that the anti ventilation plate of the outboard motor is 5–25 mm (0.2–1 in) below the bottom of hull.
If the above condition cannot be met due to the shape of the bottom of your boat, please consult your authorized dealer.

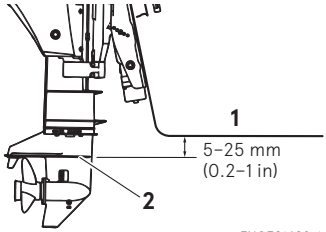

ENOF01408-1

1. Bottom of hull
2. Anti ventilation plate

ENOW00007-1

⚠ CAUTION

- **Before running test, check the boat with maximum loading capacity. Overloading or incorrect weight distribution of the weight may result in boat to lose control, even swamping or capsizing. Make sure that there is enough distance between bottom cowl and water surface to prevent water from entering the engine.**
- **Make sure to mount the engine in correct position. If outboard motor is mounted incorrectly, water may intrude the engine from openings of the bottom cowl while cruising. Exposing the engine to such condition may result in severe damage to the engine.**

ENOM00830-A

Mounting the outboard motor

MF/EF/EP/EFT type

1. Set the outboard motor to appropriate position.
2. Tighten the clamp screws by turning their handles.
3. Secure the clamp brackets to the transom board using bolts, flat washers and nylon locking nuts.
4. Secure the outboard motor to the boat with a rope to prevent accidental loss of the outboard motor overboard.

ENON00930-0

Note

Do not use tools to tighten clamp screws. Over tightening could result in damage to the clamp screws and clamp brackets.

ENON00931-0

Note

- Mounting hardware is included in the standard accessories for certain engine type only. Please refer section 12 "ACCESSORIES KIT".
- A rope is not included in the standard accessories.

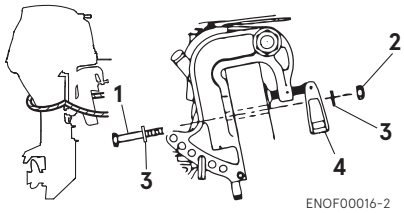

ENOF00016-2

1. Bolt (8 × 85)
2. Nylon locking nut
3. Washer
4. Clamp screw

ENOW00945-0

⚠ CAUTION

- **Please inspect whether there is a loosening of the clamp screw or mounting bolts before departure.**
- **Loosening may cause a dangerous situation, such as loss of control.**

EPT type

1. Set the outboard motor to appropriate position.
2. Secure the clamp brackets to the transom board using bolts, flat washers and nylon locking nuts.

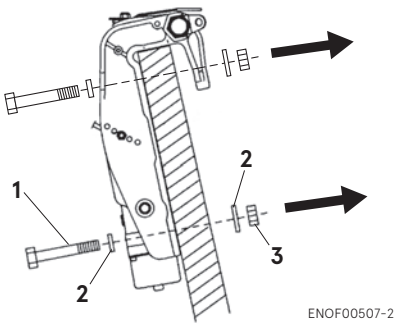

1. Bolt (8 × 85)
2. Washer
3. Nylon locking nut

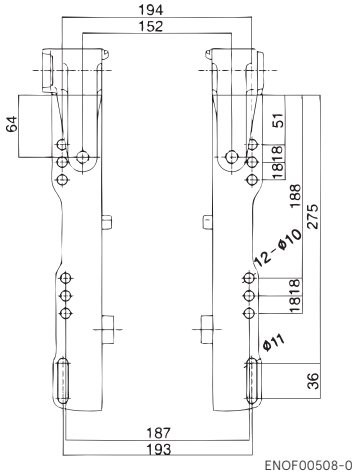

ENOW00008-2A

⚠ CAUTION

Tighten the bolts securely, otherwise the outboard motor could fall down.

ENON00003-2

Notes

1. Apply sealing material, such as silicone sealed between the bolts and the transom board holes before tightening the bolts.
2. For EP / EFT type, drill the holes in transom board only at left and right of lower side of clamp bracket, and attach outboard motor with supplied bolts.
   For EPT type, drill the holes in transom board at 4 points up and down, right and left, and attach outboard motor with supplied bolts.

- Do not reuse Nylon locking nut.

ENOM00029-A

2. Battery installation

ENOW00012-1

⚠ WARNING

Battery electrolyte contains sulfuric acid and is hazardous, causes a burn if come in contact with your skin, and poisonous if swallowed.
Keep battery and electrolyte away from reach of children.
When handling the battery, be sure to:

- **Read all warnings shown on the battery case.**
- **Prevent electrolyte from coming in contact with any part of your body. Contact can cause serious burn or, if come in contact with your eye, loss of sight. Use safety glasses and rubber gloves.**

In case you came in contact with battery electrolyte:

- **For skin, flush thoroughly with water.**
- **For eye, flush thoroughly with water, and then seek immediate medical treatment.**

In case battery electrolyte is swallowed:

- **Seek immediate medical treatment.**

ENOW00013-A

⚠ WARNING

Battery generates explosive hydrogen gas. Be sure to:

- **Charge the battery in a well-ventilated place.**
- **Place the battery away from any source of fire, sparks and open flames such as burners or welding equipment.**
- **Do not smoke near the battery when the battery is charging.**
- **Do not charge the battery when the electrolyte level is low. Otherwise, the battery will be damaged and may cause malfunction.**

ENOW00014-0

⚠ CAUTION

- **Make sure that the battery leads do not get stuck between the outboard motor and boat when turning, etc.**
- **The starter motor may fail to operate if the leads are incorrectly connected.**
- **Be sure to correctly connect the (+) and (—) leads. If not, the charging system will be damaged.**
- **Do not disconnect the battery leads from battery while the engine is operating, the electrical parts could be damaged.**
- **Always use a fully charged battery.**

ENOW00015-1

⚠ CAUTION

Do not use a battery that is not recommended. Use of a battery not recommended can lead to poor performance of, and/or damage to the electrical system.

ENON00006-1C

Note

Minimum battery requirements: 12v 40Ah/20HR, 330 Cold Cranking Amps (CCA).
Larger capacity battery is required when it is used under a freezing condition.
Recommend connecting only the engine battery cables to the starting battery.
Specifications and features of battery vary by manufacturers.
Consult the manufacturer for details.
* The battery should be purchased separately and is not supplied with the outboard motor.

1. Place the battery box in a convenient position and away from possible water spray. Securely fasten both the box and the battery so they do not shake loose.
2. Connect the positive lead (+) to the positive terminal (+) of the battery, and then connect the negative lead (—). When disconnecting the battery, always remove the negative lead (—) first. After connecting the positive terminal (+), securely place a cap on it to prevent short circuits.

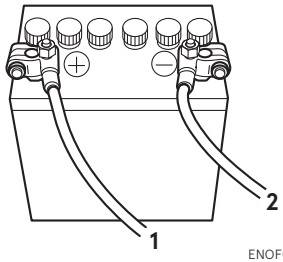

ENOF00022-1

1. Battery cord (red)
2. Battery cord (black)

PRE-OPERATING PREPARATIONS

ENOM00030-A

1. Fuel handling

ENOW000017-0

⚠ CAUTION

Use of improper gasoline can damage your engine. Engine damage resulting from the use of improper gasoline is considered misuse of the engine, and damage caused thereby will not be covered under the limited warranty.

ENOM00031-1

FUEL RATING

Use only major brand unleaded fuel meeting the following specifications:

USA and Canada — having a posted pump Octane Rating of 87 (R+M)/2 minimum. Premium gasoline (92 [R+M]/2 Octane) is also acceptable. Do not use leaded gasoline.

Outside USA and Canada — Use unleaded gasoline with declared octane rating of 91 RON or over. Use of premium gasoline of 98 RON is also allowed.

ENOM00032-1

GASOLINES CONTAINING ETHANOL

The fuel system components on your TOHATSU outboard motor will withstand up to 10% ethyl alcohol (hereinafter referred to as the "ethanol") content in the gasoline. If the gasoline in your area contains ethanol, be aware of certain adverse effects that can occur. Increasing the percentage of ethanol in the fuel can also worsen these adverse effects. Some of these adverse effects are caused by ethanol absorbing moisture in the air, which leads to separation of the water/ethanol from the gasoline in the fuel tank.

Use of gasoline containing ethanol may accelerate:

- Corrosion of metal parts
- Deterioration of rubber or plastic parts
- Fuel permeation through rubber fuel lines
- Starting and operating difficulties

If the use of gasoline containing ethanol cannot be avoided or presence of ethanol is suspected in the gasoline, it is recommended to use a filter to separate water, and frequently check the fuel system for leaks, mechanical parts for corrosion and abnormal wear.

In case any of such abnormality is found, discontinue the use of such gasoline and contact our dealer immediately.

If the outboard motor will only be used infrequently, please see the remarks on fuel deterioration in the STORAGE chapter (P 76) for additional information.

ENOW00975-0

⚠ CAUTION

When operating an outboard motor with gasoline containing ethanol, storing gasoline in the fuel tank for long periods should be avoided. Storing gasoline for long periods creates unique problems. In cars, ethanol blended fuels are normally consumed before they can absorb enough moisture to cause problems, but boats often sit idle long enough for separation phase to take place. In addition, internal corrosion may take place during storage if ethanol washes away the oil films protecting internal components.

ENOW00018-1

⚠ WARNING

Fuel leakage can cause fire or explosion, potentially leading to severe injury or loss of life. Every part of fuel system should be inspected periodically. Inspect for fuel leak, hardness or any alteration of rubber, expansion and/or corrosion of metals especially after long term storage. In case any indication of fuel leakage or degradation in fuel system is found, replace the part immediately before using the outboard motor.

ENOM00043-B

2. Fuel filling

ENOW00976-0

⚠ WARNING

Do not fill the fuel tank over capacity. Under high temperature conditions, excessive gasoline may evaporate/leak through air vent screw when it is loose or open. Leaking of gasoline is a may lead to a dangerous fire hazard.

ENOW00028-1

⚠ WARNING

Consult an authorized dealer for details on handling gasoline, if necessary.

Gasoline and its vapor are very flammable and can be explosive.

When carrying a fuel tank containing gasoline:

- **Close the fuel tank cap and air vent screw of fuel tank cap, or gasoline may evaporate through the air vent screw and may lead to a fire hazard.**
- **Do not smoke.**

When or before refueling:

- **Be sure to remove the static electricity charged in your body before refueling.**
- **The static electricity may ignite the gasoline vapor during refueling.**
- **Stop the engine, and do not start the engine during refueling.**
- **Do not smoke.**
- **Be careful not to overfill fuel tank. Wipe up any spilled gasoline immediately.**

When or before cleaning the gasoline tank:

- **Dismount fuel tank from the boat.**
- **Place the fuel tank away from every source of ignition, such as sparks or open flames.**
- **Do the work outdoors or in a well ventilated area.**
- **Wipe up gasoline well immediately if spilled.**

After cleaning gasoline tank:

- **Wipe up gasoline well immediately if spilled.**
- **If the fuel tank is disassembled for cleaning, reassemble carefully. Incorrect assembly may cause a fuel leak, possibly leading to fire or explosion.**
- **Dispose aged or contaminated gasoline in accordance with local regulations.**

ENOW00029-1

⚠ WARNING

When opening fuel tank cap, be sure to follow the procedure described below. Fuel could blast out if the fuel tank cap is opened by using another procedure when internal pressure of fuel tank is raised by heat from sources such as sun light.

ENOW0946-0

⚠ CAUTION

Separate tank must be fixed at appropriate position so that well ventilated and tank does not move or fall down while operating.

1. Fully open the air vent screw on the fuel tank cap and release internal pressure.

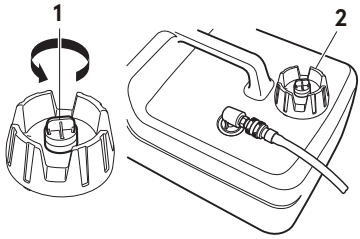

ENOF00417-1

1. Air vent screw
2. Fuel tank cap

2. Open the fuel tank cap slowly.
3. Fill the fuel carefully not to over flow.

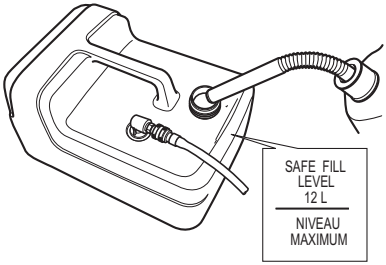

ENOF00419-B

4. After filling the tank, close the fuel tank cap.

ENOM00037-D

3. Engine oil filling

ENOW00022-2

⚠ CAUTION

The engine oil is drained for shipping at the factory. Be sure to fill the engine oil to the proper level before starting the engine.

ENOW00092-1

⚠ CAUTION

- **Do not overfill engine oil, or engine oil could leak and/or engine could be damaged. If engine oil level is over upper limit marks of oil level gauge, drain oil to level lower than upper limit.**
- **Be sure that outboard motor is upright when checking or changing oil.**
- **Stop the engine immediately if low oil pressure warning lamp or oil leak is found, or engine could be severely damaged. Consult your dealer.**
- **Wipe off engine oil well immediately if spilled and dispose of it in accordance with local fire prevention and environment protection regulations.**

1. Place the engine in a vertical position.
2. Remove the top cowl and the oil filler cap.
3. Fill the engine through filler port with recommended oil to between upper limit and lower limit shown on the dipstick.
4. Tighten the oil filler cap.

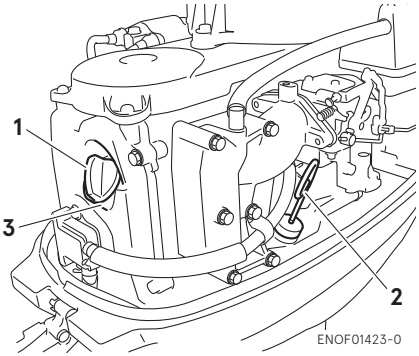

ENOF01423-0

1. Oil filler cap
2. Dipstick
3. Oil filler port

ENOF00081-0

1. Upper limit (Max.)
2. Lower limit (Min.)

Engine oil recommendation

Use only high quality 4-stroke outboard motor oil to insure performance and prolonged engine life.

SAE: 10W-30 or 10W-40
API: SH, SJ or SL

Engine oil viscosity must be selected from the following chart according to the average temperatures in your area.

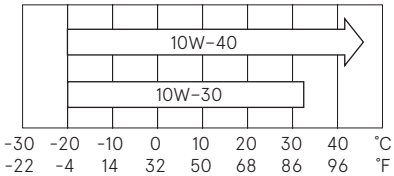

ENOF00208-0

Engine oil volume
Approximately 800 mL (27 fl.oz.)

ENOW0002A-A

⚠ CAUTION

Use of engine oils that do not meet these requirements will result in reduced engine life, and other engine problems.

ENOM00033-A

4. Break-In

Your new outboard motor and lower unit require break-in for the moving components according to the conditions described in the following time table.
Please refer to ENGINE OPERATION section (See page 33) to learn how to correctly start and operate the outboard motor.

ENOW00024-1

⚠ DANGER

Do not operate the outboard motor in closed area or area with not enough ventilation.
Exhaust gas emitted by the outboard motor contains carbon monoxide that may cause dizziness, nausea, other health problem or even death if inhaled continuously.
During operation of the outboard motor:
- **Keep peripheral area well ventilated.**
- **Always stay on the windward side of emission.**

ENOW00023-1

⚠ CAUTION

Operating the outboard motor without break-in can shorten life.
If any abnormality is experienced during the break-in:
- **Discontinue the operation immediately.**
- **Have the dealer check the product and take proper action(s) if necessary.**

ENON00008-2

Note

- During Break-in, run the outboard motor at varied RPM less than specified engine speed. Not following the procedure may result in problems and may shorten the product life.
- Break-in must be conducted under load in the water in-gear with propeller installed.

	1–10 min	10 min – 2 hrs	2–3 hrs	3–10 hrs	After 10 hrs
Throttle Position	Idle	Less than 1/2 throttle	Less than 3/4 throttle	3/4 throttle	Full throttle available
Speed		Approx. 3000 min^{-1} (rpm) max	Full throttle run allowed for 1 min every 10 min	Approx. 4000 min^{-1} (rpm). Full throttle run allowed for 2 min every 10 min	

ENOM00039-C

5. Warning system

If outboard motor encounters an abnormal condition of fault, the warning buzzer will emit a continuous beep or intermittent short beeps and the warning lamp (LED) will synchronize with the buzzer and engine speed will be limited (engine will not be stopped).
*No buzzer is located for tiller handle type and EP type.

See next page for conditions which will lead to an abnormal condition or fault.

ENOM00040-C

Location of warning buzzer and lamp

■ **Warning buzzer**

RC model (EPT type): Located inside the remote control.
*No buzzer is located for tiller handle type and EP type.

■ **Warning lamp (LED)**

RC model: Located in the tachometer & bottom cowl.
Tiller handle models: Located on the bottom cowl.

ENON00009-A

Note

Warning lamp for optional tachometer will synchronize with the warning lamp for engine side.

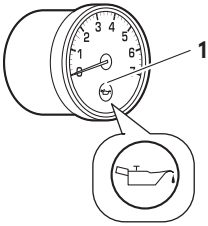

ENOF00851-A

1. Warning lamp

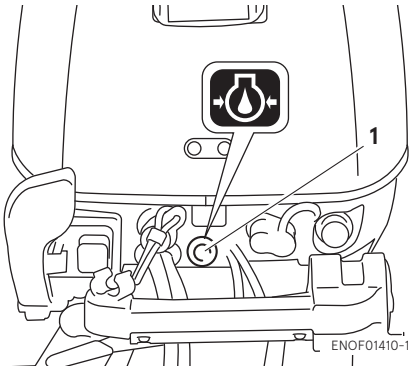

ENOF01410-1

1. Warning lamp

ENOM00041-C

Warning indicators, faults and remedy

Warning indicators			Description of faults	Remedy
Sound (EPT only)	Lamp (LED)	ESG		
-	On for several sec.	-	Normal system test when start up	
-	-	High speed ESG	Engine speed exceeds maximum allowable RPM	1
Continuous*2	ON*2	Low speed ESG	Low oil pressure*1	2

Remarks

*1: In this case, oil pressure switch is "ON".

*2: It is necessary to stop the engine, if you want to stop the working indicators and re-set the warning system.

High speed ESG (Electronic Safety Governor)

High speed ESG is a device to prevent over revolution of the engine. If the load to the engine becomes light for some reason, it runs at a higher speed than the usual. In such the case, and the ESG is activated not to ignite the spark plug. Therefore, the engine speed varies and is controlled under 6300 min^{-1} (rpm).

Low speed ESG

Low speed ESG is a device to prevent the engine from getting damage. If the engine has problems regarding oil pressure, the low speed ESG is activated not to ignite the spark plug, the engine speed varies and be controlled under 2800 min^{-1} (rpm).

ENOM00126-0

Remedy

1. Reduce the speed to less than half open throttle, and move to safe place quickly, and stop the engine.
   Check the propeller for bent or damage on blades.
   Consult an authorized dealer if engine shows the same result even after replacing propeller with a new one.
2. Move to safe place quickly, and stop the engine until it cools down.
   Check the engine oil level, and add engine oil if necessary.
   Consult your dealer if the engine oil level is too low or too high.
3. Move to safe place quickly, and check if cooling water is discharged from the water check port at idle speed and stop the engine.
   Remove any foreign matter on the gear case and propeller if necessary.
   Consult an authorized dealer if no discharge of cooling water.
4. Consult an authorized dealer.

ENOW00025-A

⚠ CAUTION

- **Low speed ESG ON: Engine speed will be limited to 2800 min^{-1} (rpm), however you should not continue to run engine.**
- **High speed ESG ON: Engine speed will be limited to 6300 min^{-1} (rpm) and engine will run rough until throttle is reduced.**

ENGINE OPERATION

ENOM00042-0

Before starting

ENOM00246-0

Oil Level checking

Check the engine oil level before each use. If the oil level is low or too high, the life of the engine will be shortened significantly. (To properly check the engine oil level, follow the instructions, see page 61)

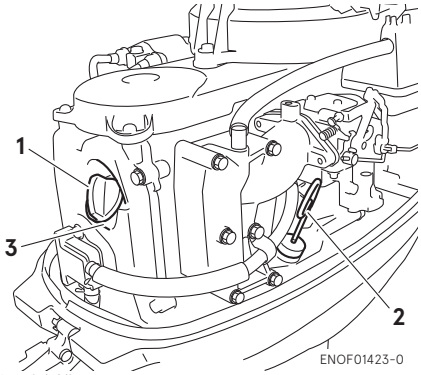

1. Oil filler cap
2. Dipstick
3. Oil filler port

1. Upper limit (Max.)
2. Lower limit (Min.)

ENOW00027-A

⚠ CAUTION

Before starting engine for the first time after reassembling engine or off-season storage, disconnect stop switch lock and crank approximately 10 times in order to prime the oil pump.

ENOM00044-C

1. Fuel feeding

ENOW00029-1

⚠ WARNING

When opening fuel tank cap, be sure to follow the procedure described below. Fuel could blast out if the fuel tank cap is opened by using another procedure when internal pressure of fuel tank is raised by heat from sources such as sun light.

ENOW0947-0

⚠ CAUTION

When using a separate tank, be sure that the fuel line is not kinked and is connected securely.

1. Fully open the air vent screw on the fuel tank cap.

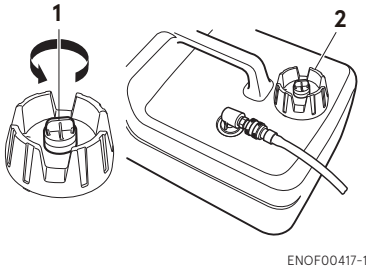

1. Air vent screw
2. Fuel tank cap

2. Open the fuel tank cap slowly and release internal pressure completely. After that, close the fuel tank.

3. Connect the fuel connector to the engine and fuel tank.

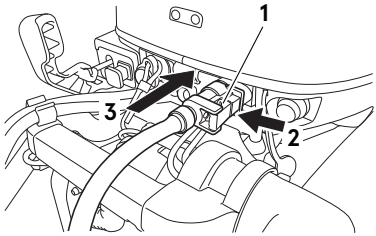

ENOF00514-0

1. Fuel connector
2. Push
3. Insert

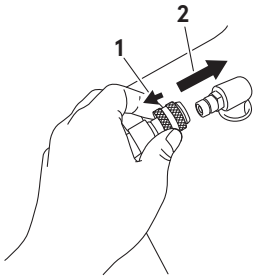

ENOF00861-A

1. Pull
2. Insert

4. Squeeze primer bulb until it becomes stiff to feed fuel to carburetor. Point the arrow mark upward when priming.

ENOF00862-0

1. Engine side
2. Fuel tank side

Do not squeeze primer bulb with engine running or when the outboard motor is tilted up to avoid fuel from overflowing.

ENOM00045-C

2. Starting the engine

ENOW00958-1

⚠ WARNING

- **Do not remove or install the top cowl after the engine has started.**
- **The exposed rotating engine parts cause serious injury.**

ENOW00959-0

⚠ CAUTION

The top cowl must be installed while the engine running except in an emergency. If the top cowl is not installed correctly, water splash can damage the engine.

ENOW00036-1A

⚠ CAUTION

When starting the outboard motor in the test tank, make sure that:

1. **Water level is at least 10 cm (4 in.) above the anti-ventilation plate to avoid overheating of the engine.**
2. **Run at idling only**
3. **Remove the propeller**
   (See page 70)

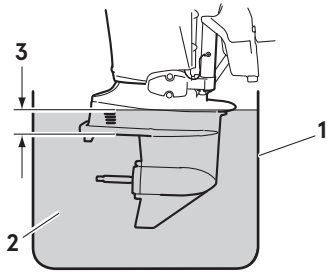

ENOF00863-0

1. Test tank
2. Water
3. Over 10 cm (4 in.)

ENOW00036-1

⚠ CAUTION

Operating outboard motor without cooling water will lead to overheating and damage on the outboard motor severely. In case the cooling water check port is not discharging water, stop the outboard motor immediately, check for any object, debris which may be blocking the cooling water check port. If you are unable to locate the cause, consult an authorized dealer immediately.

ENOW00032-A

⚠ CAUTION

Do not hold turning starter motor more than 5 seconds, or the battery may be consumed, potentially making the engine starting impossible and/or damaging the starter.
If cranking over 5 seconds fails to start engine, return main switch to "ON", and crank engine again after 10 seconds or more. Do not try to crank after engine has started.

This model is provided with start in gear protection.

ENON00010-1

Note

Start-in-gear protection prevents the engine from starting at other than neutral shift. In-gear starting of engine will move the boat immediately, potentially leading to fall down or causing passenger(s) to be thrown overboard.

Tiller handle type

1. Be sure to install the stop switch lock to the stop switch, and attach the stop switch lanyard securely to the operator or to the operator's PFD (Personal Flotation Device.)

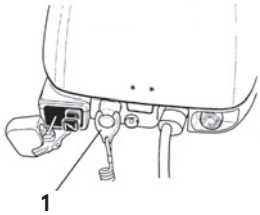

ENOF00516-0

1. Stop switch lock

2. Set the control lever in the Neutral position.

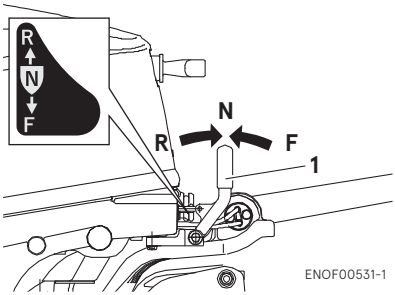

ENOF00531-1

1. Shift lever

3. Set the throttle grip to START position.

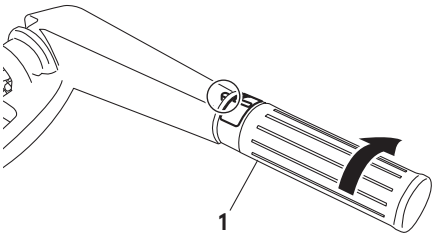

ENOF01107-0

1. Throttle grip

7

4. Pull the choke knob fully.

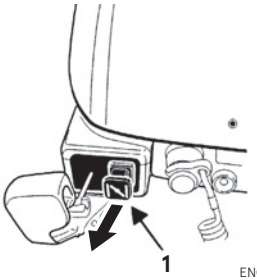

ENOF00518-0

1. Choke knob

ENON00501-0

Note

Choke is not necessary when the engine is warm. Set the throttle grip to "RE-START" position.

ENON00502-0

Note

If engine does not start with 4 or 5 times starting operation, push the knob back and restart.

(For manual starter type)

This engine is equipped with a compression release mechanism.

5. Pull the starter handle slowly until you feel engagement, keep pulling till you feel less resistance. Then pull it quickly. Repeat the procedure until the outboard motor is started.

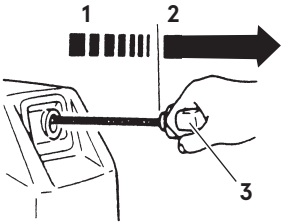

ENOF00519-0

1. Slowly
2. Quickly
3. Starter handle

(For electrical starter type)

5. Push the starter switch button and release the button when the engine has started.

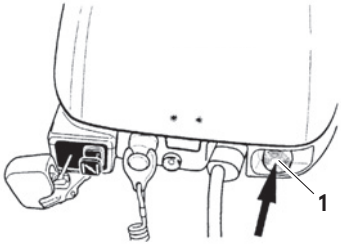

ENOF00520-0

1. Starter Button

ENOW00032-1

⚠ CAUTION

Do not hold turning starter motor more than 5 seconds, or the battery may be consumed, potentially making the engine starting impossible and/or damaging the starter.
If cranking over 5 seconds fails to start engine, return main switch to "ON", and crank engine again after 10 seconds or more.

6. After engine starting, return the choke knob while check the engine speeds. if the engine speeds unstable, pull the choke knob to operated.
7. Check the cooling water from cooling water check port.

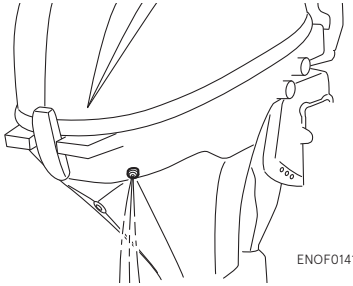

ENOF01411-1

7

Side mount RC type

1. Be sure to install the stop switch lock to the stop switch, and attach the stop switch lanyard securely to the operator or to the operator's PFD (Personal Flotation Device.)

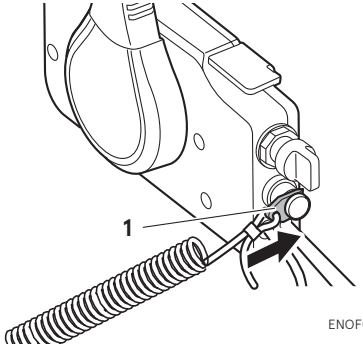

1. Stop switch lock

2. Insert the main switch key.
3. Set the control lever in the Neutral position.
4. Raise the free throttle lever a little (both of cold engine and warm engine).

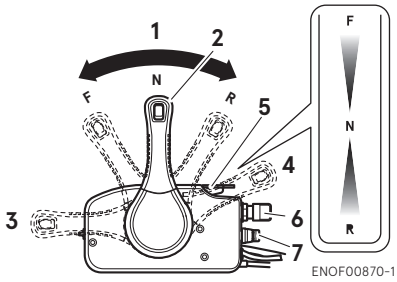

1. Neutral (N)
2. Control lever
3. Fully opened (Forward)
4. Fully opened (Reverse)
5. Free throttle lever
6. Main switch key
7. Stop switch

ENON00035-1

Note

The free throttle lever cannot be raised when the control lever is in Forward or Reverse.

5. Turn the main switch key to ON position. Then, continuously push the key to operate the choke.

ENON00503-0

Note

Choke operation is not necessary if the engine is warm.

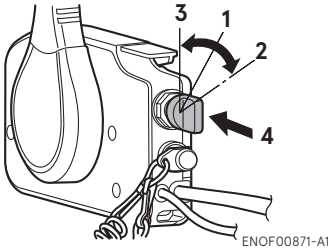

1. ON
2. START
3. OFF
4. Push to operate choke knob.

6. Stop pushing the key when the engine has started.

   The key returns to the original position, automatically.
7. Returns the free throttle lever to close position.
8. Confirm warning lamp light up and then go off after engine has started.

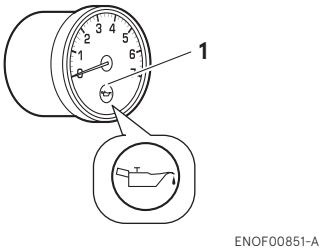

1. Warning lamp

9. Check the cooling water from cooling water check port.

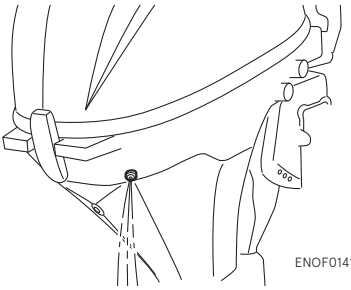

ENOM00042-A

Emergency starting

ENOW00099-1

⚠ WARNING

When the emergency starter rope is used for starting engine;

- **Start in gear protection does not work. Make sure that shift is in neutral position. If the gear is in Forward or Reverse, the boat can start moving immediately and may lead to accident and personal injury.**
- **Be careful that of your clothes or other items do not to get caught in the rotating parts.**
- **To prevent accident and injury by rotating parts, do not re-attach flywheel cover or recoil starter and the top cowl after the engine has been started.**
- **Do not pull starter rope if any bystander is around.**
- **Attach engine stop switch lanyard to clothing or any part of body such as wrist, arm before starting engine the outboard motor.**

1. Remove the top cowl.

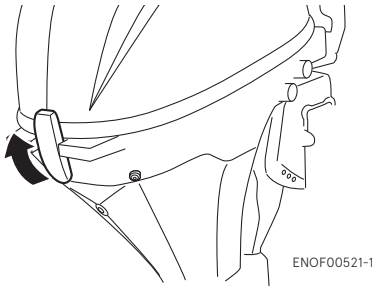

2. Remove starter lock cable from recoil starter by loosening the screw for the starter lock cable.

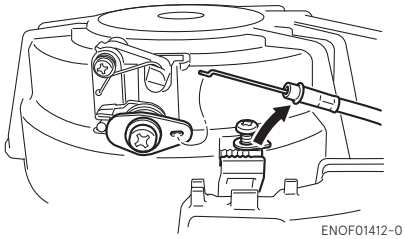

3. Remove the bolts (3 pcs) and remove the recoil starter.

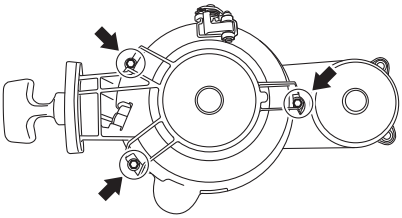

4. Insert the knotted end of the starter rope into the notch in the flywheel and wind the rope around the flywheel several turns clockwise.

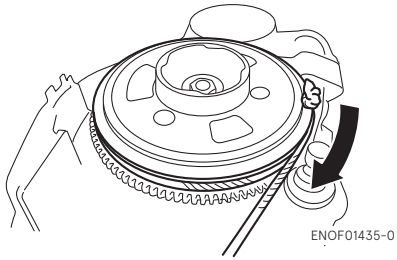

5. Tie a loop in the another end of the emergency starter rope and attach socket wrench, Both the loop and the wrench are provided in outboard motor box.

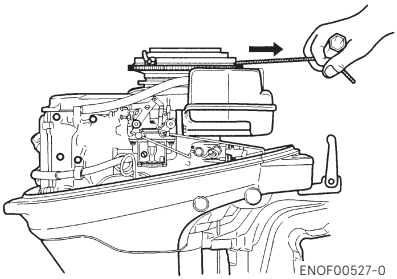

ENOW00860-0

⚠ CAUTION

Be sure to keep the harness away from the rotation parts.

6. Be sure to install the stop switch lock to the stop switch, and attach the stop switch lanyard securely to the operator or to the operator's PFD (Personal Flotation Device.)
7. Set the control lever in the Neutral position.
8. Pull the starter handle slowly until you feel engagement, keep pulling till you feel less resistance. Then pull it quickly.
9. Once the outboard motor is started, do not reinstall the recoil starter and top cowl.

ENOM00518-0

If the choke solenoid fails to operate (EP and EPT type only)

1. Remove the top cowl.
2. Close the choke plate by finger.
3. Raise the free throttle lever a little.
4. Turn the main switch key to start position.
5. Stop pushing the key when the engine has started.
6. Return the choke plate to open position.

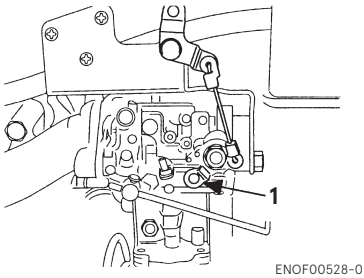

1. Choke plate (open position)

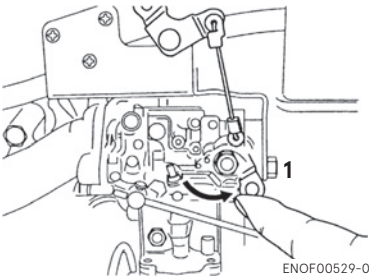

1. Choke plate (closed position)

ENOM00043-A

3. Warming up the engine

ENOW00932-1

⚠ CAUTION

Be sure to check that cooling water is discharged from the cooling water check port during warm up.

Warm the engine at low engine speeds for about
3 minutes : above 5°C (41°F)
5 minutes at 2000 min^{-1} (rpm) : blow 5°C (41°F)
This allows the lubricating oil to circulate to all parts of the engine. Operating the engine without warm up shortens the engine's life.

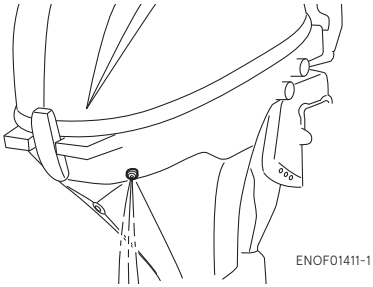

ENOM00044-A

Engine speeds

Idling speed after warming up.

Clutch in (In gear)	Clutch off (Out of gear)
900 min^{-1} (rpm)	950 min^{-1} (rpm)

ENOM00972-1

Free throttle lever (Side mount RC type)

ENOW00956-A

⚠ CAUTION

- **The free throttle lever is inoperative unless the control lever is in neutral.**
- **Also, the control lever is inoperative unless the free throttle lever is returned to the fully-closed position.**

Move the free throttle lever upward to open the throttle.

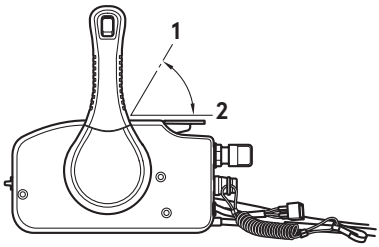

1. Fully-open
2. Fully-closed

ENOM00046-A

4. Forward, reverse, and acceleration

ENOW00037-1

⚠ WARNING

Before shifting into forward or reverse, make sure that boat is properly moored and outboard motor can be steered fully to the right and left. Make sure that no swimmer(s) is around of the boat.

ENOW00967-0

⚠ WARNING

- **Attach the other end of emergency stop switch lanyard to the operator's PFD (Personal Flotation device) or arm and keep it attached during cruising.**
- **Do not attach the lanyard to a part of clothing that can be torn easily when pulled.**
- **Arrange the lanyard so that will not be caught by any object when pulled.**
- **Be careful not to pull the lanyard accidentally during cruising. Unintentional stop of engine can cause loss of control of outboard motor. Rapid loss of engine power can lead to fall down or causing passenger(s) to be thrown overboard.**

ENOW00042-1

⚠ WARNING

- **Do not shift into Reverse during planing, or control will be lost leading to serious personal injury, boat may swamp, and/or hull may be damaged.**
- **Do not shift into Reverse during cruising, or control may be lost, fall down or causing passenger(s) to be thrown overboard. Leading to serious personal injury, and steering system and/or shifting mechanism may be damaged.**

ENOW00861-1

⚠ WARNING

Do not shift at high boat speed, or control may be lost, fall down or causing passenger(s) to be thrown overboard. Leading to serious personal injury.

ENOW00867-1

⚠ WARNING

Sudden acceleration and deceleration may cause passenger(s) to be thrown overboard or fall down.

ENOW00862-1

⚠ CAUTION

Gear and clutch damage may occur if shifting at high engine speed.
Engine must be in the slow idle position before shifting.

ENOW00863-0

⚠ CAUTION

Idle speed may be higher during warming up of engine. If shifted to Forward or Reverse during warming up, it may be difficult to shift back to neutral. In such case, stop engine, shift to neutral, and restart engine to warm up.

ENON00014-0

Note

Frequent shifting to forward or reverse can accelerate wear or degradation of parts. In such case, replace gear oil earlier than the period specified.

ENOW00864-0

⚠ CAUTION

Do not increase engine speed unnecessarily when the shift is in neutral and reverse, or engine damage may occur.

ENOM00890-A

Tiller handle type

ENOW00865-A

⚠ CAUTION

Do not force to shift when the throttle grip is not in the fully closed position, otherwise, steering system and/or shifting mechanism may be damaged.

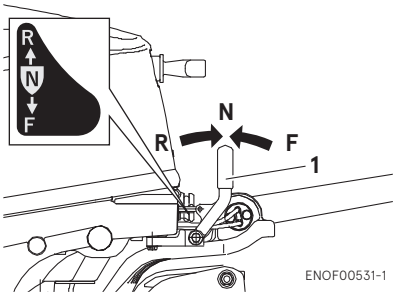

1. Shift lever

Forward

1. Turn the throttle grip to reduce engine speed.
2. When the engine reaches trolling (or idling) speed, quickly pull the shift lever to the Forward position.

Reverse

1. Turn the throttle grip to reduce engine speed.
2. When the engine reaches trolling (or idling) speed, quickly pull the shift lever to the Reverse position.

Acceleration

Open throttle grip or control lever gradually.

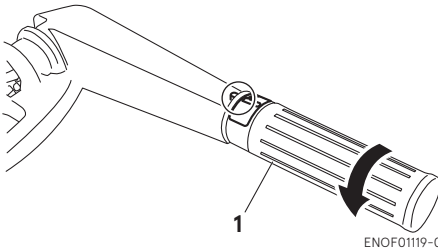

1. Throttle grip

ENOM0900-0

Side mount RC type

ENOW00865-A

⚠ CAUTION

Do not force to shift when the throttle grip is not in the fully closed position, otherwise, steering system and/or shifting mechanism may be damaged.

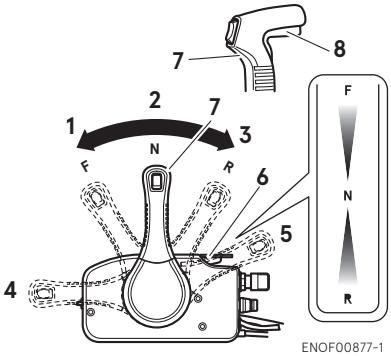

1. Forward (F)
2. Neutral (N)
3. Reverse (R)
4. Fully opened (Forward)
5. Fully opened (Reverse)
6. Free throttle lever
7. Control lever
8. Neutral lock arm

Forward

1. Quickly push the control lever to the Forward (F) position 32°, where the gear is connected, while lifting up on the lock button located under the control lever grip.
2. Further forward motion will open the throttle.

Reverse

1. Quickly pull the control lever to the Reverse (R) position at 32°, where the gear will be connected, while lifting up on the lock button located under the control lever grip.
2. Further rearward motion will open the throttle.

Acceleration

Open throttle grip or control lever gradually.

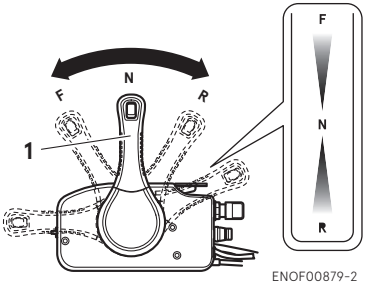

ENOF00879-2

1. Control lever

ENOM00049-A

5. Stopping the engine

ENOW00868-1

⚠ WARNING

Be careful not to remove engine stop switch lanyard from engine accidentally while boat is running. Sudden stop of engine can cause loss of steering control, speed, possibly leading the crew(s) and or objects on the boat to be thrown forward due to inertial force.

Tiller handle type

1. Turn the throttle grip to the slow position.

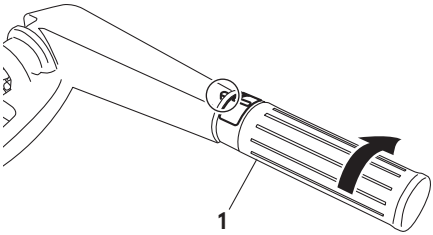

ENOF01107-0

1. Throttle grip

2. Put the shift lever in the Neutral position.
   Run the engine for 2-3 minutes at idling speed for cooling down if it has been running at full speed.
3. Push the stop switch for a few seconds to stop the engine.

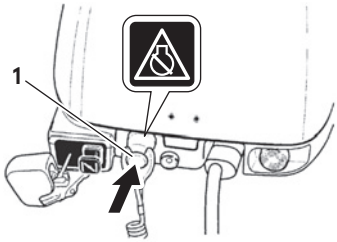

ENOF00569-1

1. Stop Switch

Side mount RC type

1. Put the control lever in the Neutral position and run the engine for 2-3 minutes at idling speed for cooling down if it has been running at full speed.

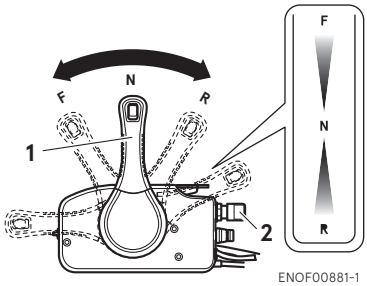

ENOF00881-1

1. Control lever
2. Main switch key

2. Turn the main switch key to the OFF position or push the stop switch. (Do not forget to turn the key off).

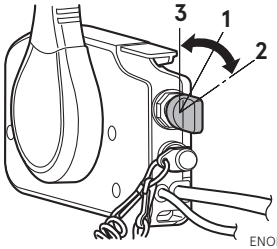

ENOF00871-1

1. ON
2. START
3. OFF

ENOW00869-1

⚠ WARNING

After stopping the engine:

- **Close the air vent screw on the fuel tank cap.**
- **Disconnect the fuel connector of the engine and the fuel tank.**
- **Disconnect the battery cable, after each use.**

Emergency engine stopping

Remove stop switch lock to stop the engine.

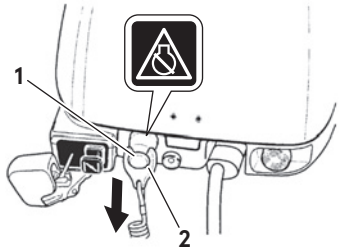

ENOF00569-C

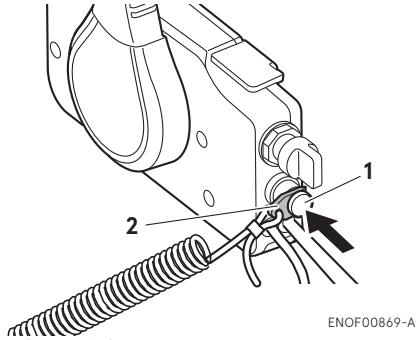

ENOF00869-A

1. Stop switch
2. Stop switch lock

ENOM00910-1

Spare emergency stop switch lock (For CE marking model)

A spare emergency stop switch lock is provided in the accessories bag.

Make sure that spare stop switch lock is available before operating outboard motor.

When used as described, the emergency stop switch clip and emergency stop switch lanyard system stops the engine if the operator is thrown overboard. When

an operator falls into water, be sure to use spare emergency stop switch lock.

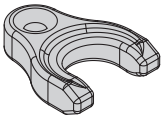

ENOF00891-0

ENOM00920-0

6. Steering

ENOW00870-0

⚠ WARNING

Sudden steering may cause passenger(s) to be thrown overboard or falling down.

Tiller handle type

Right turn

Move the tiller handle to the left

Left turn

Move the tiller handle to the right.

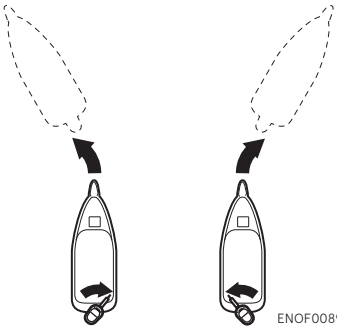

ENOF00892-0

Remote control type

Right turn

Turn the steering wheel to the right.

Left turn

Turn the steering wheel to the left.

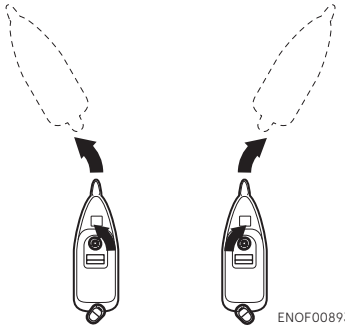

ENOF00893-0

ENOM00050-0

7. Trim angle

ENOW00043-1

⚠ WARNING

- **Adjust the trim angle when the engine is stopped.**
- **Do not put hand or finger in between outboard motor body and clamp bracket when adjusting trim angle to prevent possible injury.**
- **Unsuitable trim position can cause loss of control of boat. When testing a trim position, run the boat slowly initially to see if it can be controlled safely.**

ENOW00044-1

⚠ WARNING

Excessive trim up or down may cause unstable boat operation, loss of control that may leads to accident during cruising.

- **For manual tilt model, If you feel the trim is improperly positioned, stop the boat and readjust trim angle before continuing to cruise.**
- **For outboard motor model with PT or PTT switch on the bottom cowl, do not operate the switch during while cruising, or control of boat may be lost.**

The trim angle of the outboard motor can be adjusted to suit the transom angle of the hull, and load conditions. Choose an appropriate trim angle that will allow the anti-ventilation plate to run parallel to the water surface during operation.

ENOM00052-0

Proper trim angle

The position of the thrust rod is correct if the hull is horizontal during operation.

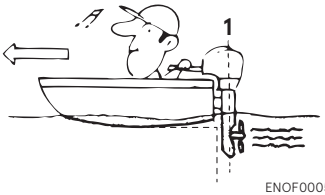

ENOF00051-1

1. Perpendicular to the water surface

ENOM00053-A

Improper trim angle (bow rises too high)

Set the thrust rod (or preset knob) lower if the bow of the boat rises above horizontal.

ENOF00052-0

ENOM00054-0

Improper trim angle (bow dips into the water)

Set the thrust rod (or preset knob) higher if the bow of the boat is below horizontal.

ENOF00053-0

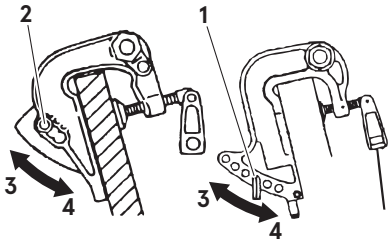

ENOF00532-0

1. Thrust rod
2. Preset knob
3. Higher
4. Lower

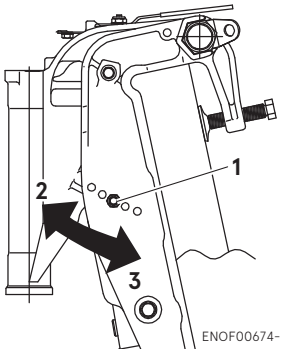

ENOF00674-B

1. Thrust rod
2. Higher
3. Lower

Remark: Thrust rod is for MF and EF, and preset knob is for EP.

Trim angle adjustment (Manual tilt MF, EF type)

The transom angle adjustment

1. Stop the engine.
2. Shift into neutral position.
3. Tilt up the outboard motor.
4. Remove the thrust rod as shown picture.

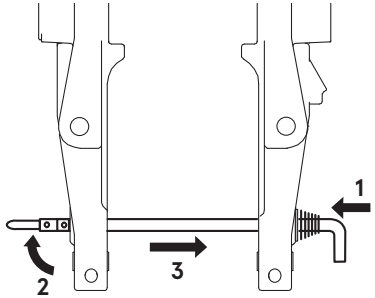

ENOF01238-1

1. Push in
2. Rise the stopper
3. Pull out

5. Reinstall the thrust rod in the desired position securely.
6. Gentry tilt down the outboard motor.

Trim angle adjustment (Manual tilt RC type)

The transom angle adjustment

1. Stop the engine
2. Shift into forward.
3. Raise the outboard motor to the tilt up position.
4. Change the trim lock pin position as following picture.

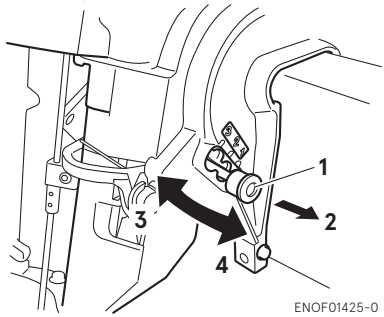

ENOF01425-0

1. Preset knob
2. Pull
3. Higher
4. Lower

5. Reinstall preset knob securely.
6. Gentry lower the outboard.

Trim angle adjustment (Power tilt type)

The transom angle adjustment

1. Stop the engine.
2. Shift into neutral position.
3. Tilt up the outboard motor.
4. Lock the tilt stopper.
5. Change the trim lock pin position as shown in the picture.

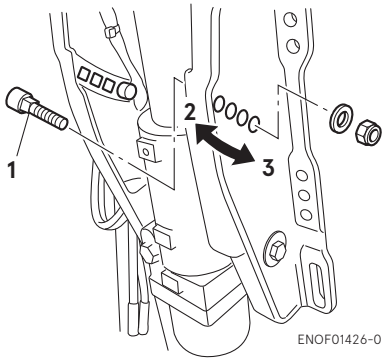

ENOF01426-0

1. Trim lock pin
2. Higher
3. Lower

6. Reinstall the trim lock pin securely.
7. Operate the Power Tilt switch and tilt down the outboard.

ENOM00060-A

8. Tilt up and down

ENOW00055-1

⚠ WARNING

Do not tilt the outboard motor up or down when swimmer(s) and/or passenger(s) are near to prevent them from being caught between outboard motor body and clamp bracket.

ENOW00048-1

⚠ WARNING

When tilting up or down, be careful not to place your hand between the swivel bracket and the stern bracket.

ENOW00056-A

⚠ WARNING

When tilting up outboard motor with fuel joint for over a few minutes, be sure to disconnect fuel hose, or fuel may leak, potentially catching fire.

ENOW00057-1

⚠ CAUTION

Do not tilt up the outboard motor while engine is operating, or no cooling water may be discharged, leading to engine seizure due to overheating.

ENON00921-1

Note

After use, leave the outboard motor upright for a minute to drain the water from inside the engine.

ENOM00062-A

Manual Tilt type

Tilt up

With the shift lever in Neutral or Forward, fully tilt the motor up toward you by holding the tilt handle provide at the rear of the top cowl. Then slightly lower the motor for locking in the up position.

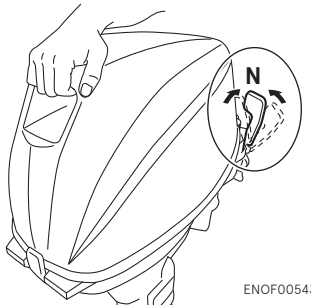

ENOF00543-1

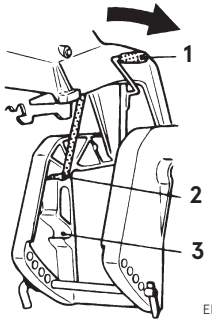

ENOF00544-0

1. Tilt lever
2. Tilt up position
3. Shallow water operating position

ENOM00063-A

Tilt down

Slightly tilt the motor up, and pull the tilt lever toward you to release the tilt-lock. Then lower the motor slowly.

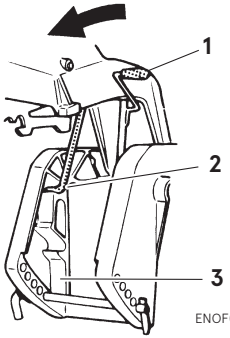

ENOF00545-1

1. Tilt lever
2. Tilt up position
3. Tilt down position

ENOM00564-0

Manual Tilt RC type

Tilt up

1. Put the control lever to the Forward (F) position.

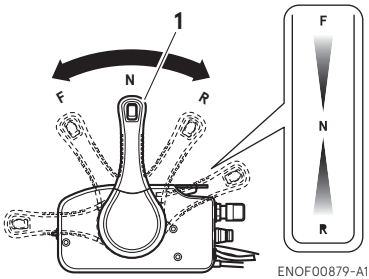

ENOF00879-A1

1. Control lever

2. Tilt the outboard motor all the way up until it is in tilted - up position.

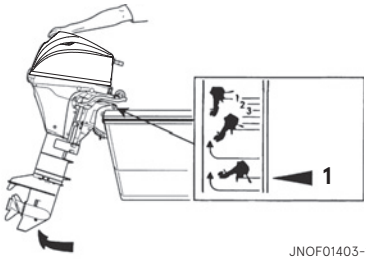

JNOF01403-1

1. Tilt up position

3. Set the knob to Lock position, then secure the tilt locking.

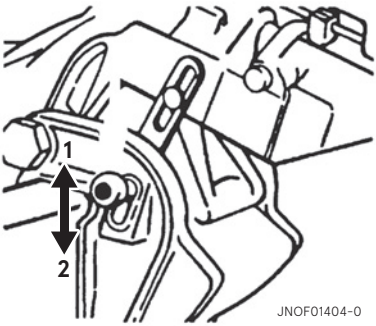

JNOF01404-0

1. LOCK
2. UN-LOCK

Tilt down

1. Set the knob to Unlock position.

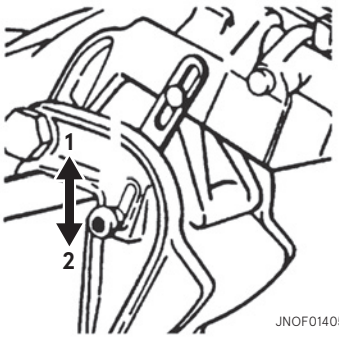

JNOF01405-0

1. LOCK
2. UN-LOCK

2. Lift up the outboard motor slightly until it is in Release position, and then outboard motor tilted down.

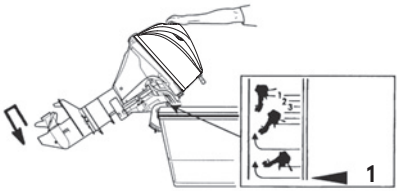

JNOF01406-1

1. Tilt release position

ENOM00069-B

Power Tilt type

Tilt up

1. Operate the Power Tilt switch and tilt the outboard motor up.
2. Lock the tilt with the Tilt stopper after the outboard motor has been tilted up

Tilt down

1. Release the tilt stopper from the set-up position while slightly tilting up outboard motor.
2. Operate the Power Tilt switch and tilt the outboard motor down until the motor touches to the thrust rod.

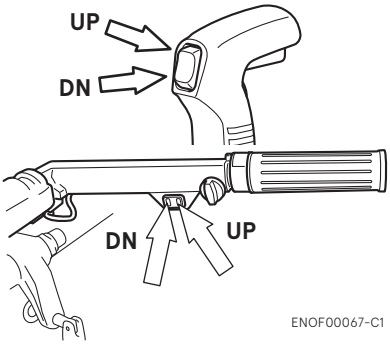

ENOF00067-C1

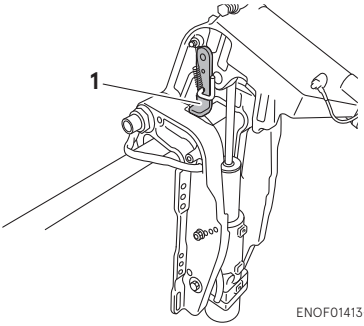

ENOF01413-0

1. Tilt stopper

The outboard motor can also be tilted up and down using the switch provided on the bottom cowl.

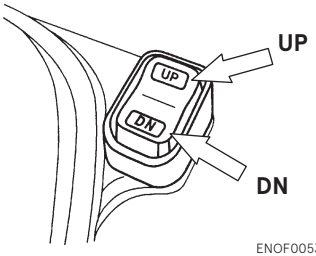

ENOF00539-0

It is possible to tilt up or down in spite of main switch "ON" or "OFF".

ENOM00940-1

Manual relief valve

If the battery is dead, and/or the power tilt switch is inoperative open the manual valve completely in the Manual direction. This allows the outboard motor to be tilted manually.

ENOW00872-1

⚠ WARNING

Make sure the manual relief valve is closed before operating the outboard motor. If the manual relief valve is not closed, the out-

board motor will be tilted up when shifting in reverse.

ENOW00873-1

⚠ WARNING

Before opening the manual relief valve, make sure nobody is under the outboard motor. If the outboard motor is in the tilted upposition with the manual relief valve loosend, the outboard motor will be tilted down suddenly.

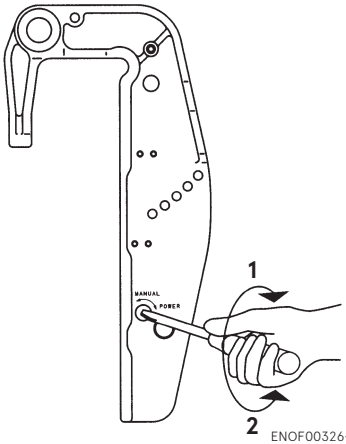

ENOF00326-0

1. Power
2. Manual

Manual relief valve specified tightening torque

2 N·m (1.5 ft·lb, 0.2 kgf·m)

ENOM00068-A

9. Shallow water operation

ENOW00051-0

⚠ WARNING

During shallow water operation, be careful not to place your hand between the swivel bracket and the clamp bracket. Be sure to tilt the outboard motor down slowly.

ENOW00053-0

⚠ CAUTION

While in shallow water drive position, do not operate the outboard motor in Reverse. Operate the outboard motor at slow speed and keep the cooling water intake submerged.

ENOW00054-1A

⚠ CAUTION

Do not over tilt the outboard motor when driving in shallow water, or air may be sucked through water inlet, potentially leading to engine overheating.

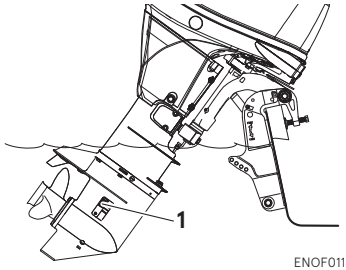

ENOF01144-A

1. Water inlet

Manual tilt type (MF, EF type)

Shallow water running position:

1. With the shift lever in Neutral or Forward, tilt the motor up slowly by about 40° and then lower the tilt lever for setting at the shallow water running position.

Return to normal running position:

2. Tilt the motor up fully and then return the motor down slowly to the normal running position.

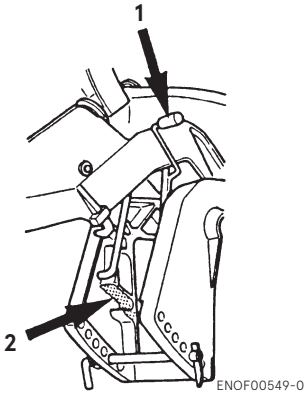

1. Tilt lever
2. Shallow water running position

ENOM00541-A

Manual tilt type (EP type)
Shallow water running position

1. Stop the engine.
2. Shift the outboard into forward.
3. Tilt the outboard up to one of the shallow water positions.

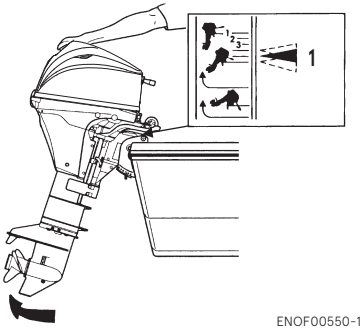

1. Shallow water drive position

Return to normal running position

1. Stop the engine.
2. Tilt the outboard up to the tilt release position.
3. Gently lower the outboard.

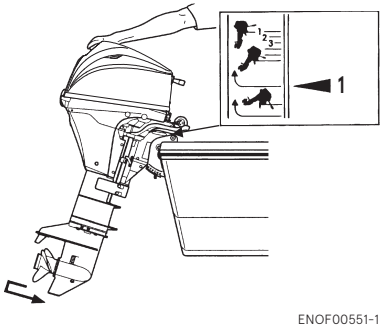

1. Tilt release position

ENOM00069-A

Power Tilt type

1. Operate the Power Tilt switch and tilt the outboard motor up into desired shallow water running position.

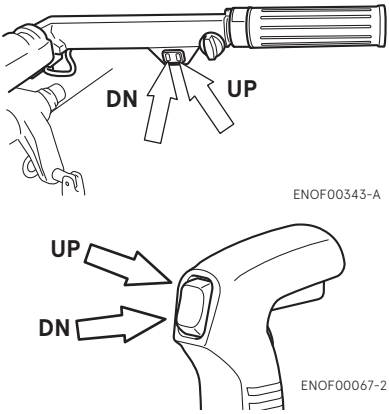

7

REMOVING AND CARRYING THE OUTBOARD MOTOR

ENOM00070-C

1. Removing the outboard motor

ENOW00064-1

⚠ CAUTION

Engine may be hot immediately after operation and could cause burns if came in contact. Allow engine to cool down before attempting to carry the outboard.

1. Stop the engine.
2. Disconnect the fuel connector, the remote control cables and the battery cables from the outboard motor.
3. Remove the outboard motor from boat and completely drain the water from the gear case.

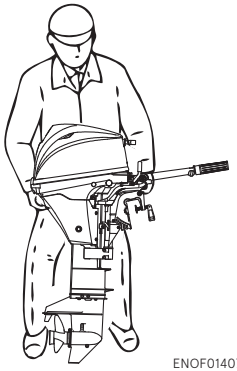

ENOF01407-1

ENOM00071-A

2. Carrying the outboard motor

ENOW00933-0

⚠ WARNING

Be sure to disconnect fuel connector except when operating engine.

Fuel leakage is a fire or explosion hazard, which can cause serious injury or death.

ENOW00065-1

⚠ WARNING

Close air vent screw on fuel tank before carrying or storing outboard motor and fuel tank, or fuel may leak, potentially catching fire.

ENOW00066-1

⚠ CAUTION

- **Do not give a shock to an outboard motor during transportation.**
- **Do not carry or store outboard motor in any of positions described below.**

Otherwise, engine's exterior may be damaged or water may enter the cylinder through the exhaust port and cause engine problems.

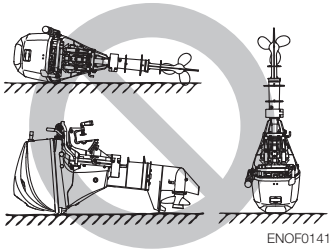

ENOF01414-1

Keep the outboard motor in a vertical position when carrying.
The optional outboard motor stand is recommended for keeping the outboard motor vertical both during transport and storage.

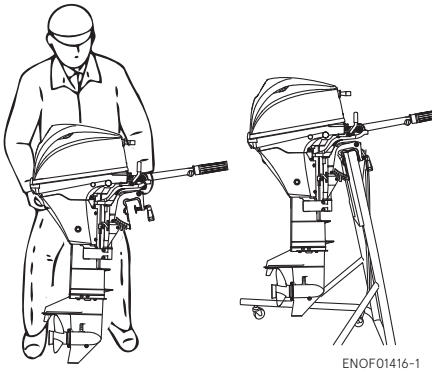

ENOF01416-1

ENON00021-3

Note

If the outboard motor must be laid down, be sure that fuel is completely drained, then lay the outboard motor with port side down on the cushion as shown in the drawing.

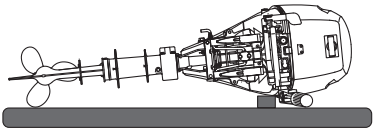

ENOF01415-0

ENOM00072-1A

3. Trailering

ENOW00072-0

⚠ CAUTION

Trailering in the tilted position may cause damage to the outboard motor, boat, etc.

ENOW00073-A

⚠ WARNING

Be sure to disconnect fuel connector except when operating engine.
Fuel leakage is a fire or explosion hazard, which can cause serious injury or death.

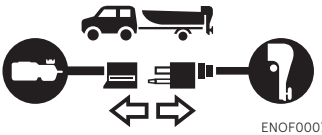

ENOF00075-1

ENOW00068-0

⚠ WARNING

Close air vent screw of fuel tank and fuel cock before carrying or storing outboard motor and fuel tank, or fuel may leak, potentially catching fire.

ENOW00071-0

⚠ CAUTION

The tilt support device supplied on your outboard motor is not intended for towing. It is intended to support the outboard motor while the boat is docked, beached, etc.

When transporting a boat on a trailer with the outboard motor still attached, disconnect the fuel line from the outboard motor beforehand and keep the outboard motor in the normal running position or on a transom saver bar.

Tiller handle type

While transporting outboard motor attached to the boat on a trailer, properly tighten the steering friction bolt to prevent the outboard motor from moving (page 56).

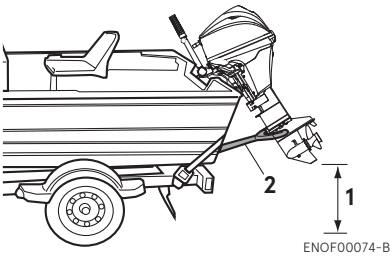

1. Ground clearance should be provided sufficiently.
2. Transom saver bar

ENOW00067-0

⚠ WARNING

Do not go under outboard motor tilted up even if it is supported by support bar, or accidental fall of outboard motor could lead to severe personal injury.

ENOM00073-0

1. Steering friction

Tiller handle type

ENOW00977-0

⚠ WARNING

Do not overtighten the steering friction bolt or lever, it could result in difficult handling of the outboard motor, resulting in the loss of control causing an accident and could lead to severe injury.

ENON00506-1B

Note

The steering friction adjustment bolt or lever is used to adjust the friction load of the steering. Excessive tightening of the adjustment bolt may cause damage to the swivel bracket.

ENOM00544-A

Steering friction can be adjusted in accordance with your preference by turning the steering friction adjustment bolt or lever.

EF, MF type

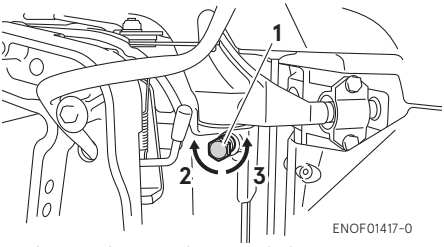

1. Steering friction adjustment bolt
2. Increase
3. Decrease

EFT type

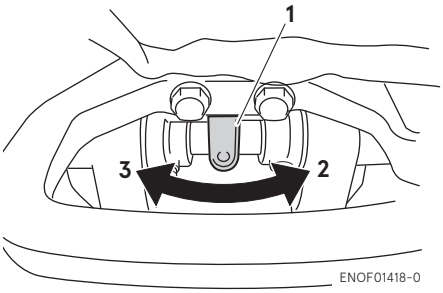

1. Steering friction lever
2. Decrease
3. Increase

ENOM00074-A

2. Throttle grip friction

ENOW00074-1B

⚠ WARNING

Do not overtighten the throttle adjustment screw or it could result in difficult handling of the outboard motor, resulting in the loss of control causing an accident and could lead to severe injury.

Friction adjustment of the throttle grip can be made with the throttle adjustment screw.

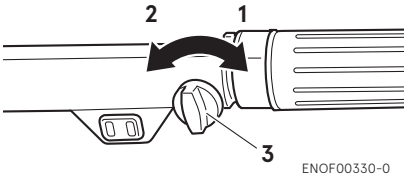

1. Increase
2. Decrease
3. Throttle friction adjustment screw

ENOM00075-0

3. Remote control lever friction

EP, EPT type

ENOW00074-1C

⚠ WARNING

Do not overtighten the remote control throttle friction adjustment screw or it could result in difficult handling of the outboard motor, resulting in the loss of control causing an accident and could lead to severe injury.

To adjust the friction of the remote control lever, turn the throttle friction adjustment screw on the front of the remote control. Turn clockwise to increase the friction and counter-clockwise to decrease it.

Side mount type

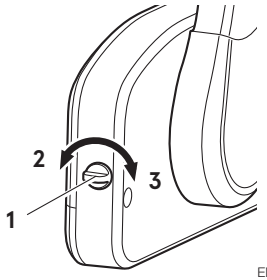

ENOF00078-2

1. Throttle friction adjustment screw
2. Decrease
3. Increase

ENOM00076-0

4. Trim tab adjustment

ENOW00076-1

⚠ WARNING

- **Be sure that the outboard motor is secured to transom or service stand, or accidental drop or fall of outboard motor could lead to severe personal injury.**
- **Be sure to lock the outboard motor in the tilt up position, or accidental fall of outboard motor could lead to severe personal injury.**
- **Do not go under outboard motor in the tilt up position and locked, or accidental fall of outboard motor could lead to severe personal injury.**

ENOW00075-1

⚠ WARNING

Inappropriate adjustment of trim tab could cause steering difficulty. After installing or readjusting trim tab, check if steering load is even.

If straight-line cruising can not be achieved, adjust the trim tab located under the anti-ventilation plate.

- If the boat veers toward the left direct the trim tab towards A (left from rear of boat).
- If the boat veers toward the right direct the trim tab towards B (right from rear of boat).

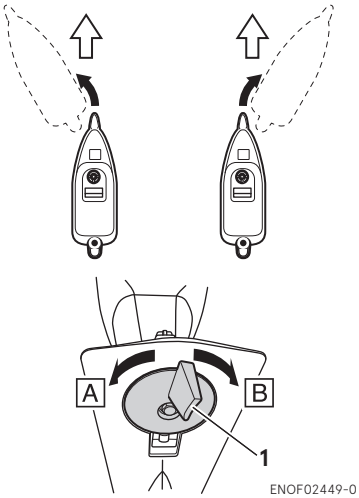

1. Trim tab

ENON00022-A

Notes

- After adjustment securely tighten the trim tab fixing bolt.
- Check for looseness of the bolt and the trim tab at regular intervals.

INSPECTION AND MAINTENANCE

ENOM00077-1

Care of your outboard motor

To keep your outboard motor in the best operating condition, it is very important that you perform daily and periodic maintenance as suggested in the maintenance schedules as follows.

ENOW00077-1

⚠ CAUTION

- **Your personal safety and that of your passengers depends on how well you maintain your outboard motor. Carefully read all of the inspection and maintenance procedures described in this section.**
- **The maintenance intervals shown in the checklist apply to an outboard motor in normal use. If you use your outboard motor under severe conditions such as frequent full-throttle operation, frequent operation in brackish water, or for commercial use, maintenance should be performed at shorter intervals. If in doubt, consult your dealer for advice.**
- **We strongly recommend that you use only genuine replacement parts on your outboard motor. Damage to your outboard motor arising from the use of other than genuine parts is not covered under the warranty.**

ENOM00551-0

1. Daily Inspection

Perform the following checks before and after use.

ENOW00078-1

⚠ WARNING

Do not use outboard motor if any abnormality is found during pre-operation check otherwise it could result in severe damage to the motor or severe personal injury.

Item	Points to Check	Remedy
Fuel System	· Check the amount of fuel in the tank. · Check for debris or water in the fuel filters. · Check the rubber hoses for fuel leakage.	Replenish Clean or Replace Replace
Fuel Tank Cap	· Check for crack, leakage, damage in the fuel tank cap. · Check for crack, damage in the gasket. · Check for leakage at full close.	Replace Replace Replace
Engine Oil	· Check the oil level.	Fill to the upper level mark on dipstick
Electrical Equipment	· Check that the main switch functions normally. · Check that the battery electrolyte level and specific gravity are normal. · Check for loose connections on the battery terminal. · Check that the stop switch functions normally and make sure the lock plate is secured. · Check cords for loose connections and damage. · Check the spark plugs for dirt, wear and carbon build-up.	Replace Replenish or recharge Retighten Remedy or replace Correct or replace Clean or replace
Throttle System	· Check carburetor linkage is working normally when turning the throttle grip.	Correct
Recoil Starter	· Check the rope for wear and chafing. · Check the ratchet engagement.	Replace Correct or replace
Clutch and Propeller System	· Check that clutch engages correctly when operating the shift lever. · Visually Check propeller for bent or damaged blades. · Check the propeller nut is tightened and the split pin is in correct position.	Adjust Replace
Installation of Motor	· Check all the bolts attaching the motor to the boat. · Check the thrust rod installation.	Tighten
Cooling Water	· After starting the outboard motor, make sure that water is being discharged from the cooling water check port.	Repair
Tools and Spares	· Check that there are tools and spare parts for replacing spark plugs, the propeller, etc. · Check that you have the spare rope.	
Steering Devices	· Make sure that steering handle and remote control is functioning normally.	Repair
Other parts	· Check if the anode is securely installed. · Check the anode for corrosion and deformation.	Repair if necessary Replace

ENOM00081-D

Oil level checking

If the oil level is low, or too high, the life of the engine will be shortened significantly.

1. Place the engine in a vertical position.
2. Remove the top cowl.
3. Remove the dipstick.
4. Wipe oil off the dipstick with a clean cloth.
5. Insert the dipstick to the hole completely.
6. Remove the dipstick again. Check the oil level on the dipstick. Oil level must be between the upper limit and lower limit shown on the dipstick.
7. Return the dipstick.

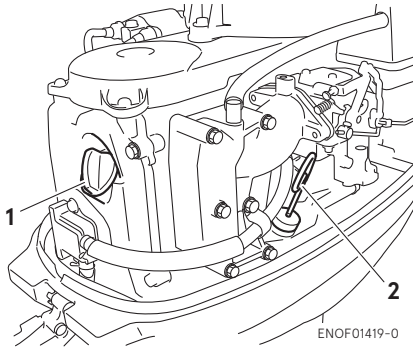

1. Filler cap
2. Dipstick

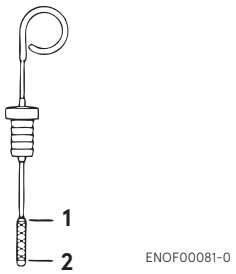

1. Upper limit (Max.)
2. Lower limit (Min.)

ENON00024-0

Note

The oil level should be checked when the engine is cooled.

ENON00025-0

Note

Consult with an authorized dealer if the engine oil is milky color, or appears contaminated.

ENOM00082-A

Engine oil replenishing

ENOW00079-A

⚠ CAUTION

- **Do not add engine oil of brand and grade other than existing one. In case engine oil of other brand or grade is added, drain all oil and ask dealer for treatment.**
- **In case other than engine oil such as gasoline is put in the oil chamber, empty the chamber and ask dealer for treatment.**
- **When replenishing engine oil, be careful not to allow entry of foreign matters such as dust and water into oil chamber.**
- **Wipe off engine oil well immediately if spilled and dispose of it in accordance with local fire prevention and environment protection regulations.**
- **Do not replenish engine oil over upper limit. If overfilled, remove oil to upper limit. If engine oil is over the upper limit, it can leak potentially leading to engine damage.**

If the oil level is low, or at lowest mark, add recommended oil to the middle dipstick mark.

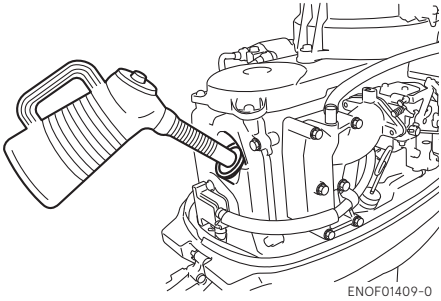

ENOM00083-B
Washing outboard motor

ENOW00081-1

⚠ WARNING

Do not start engine without removing propeller, turning propeller out in the open may lead to personal injury.

ENOW00082-0

⚠ WARNING

Never start or operate the engine indoors or in any space which is not well ventilated. Exhaust gas contains carbon monoxide, a colorless and odorless gas which can be fatal if inhaled for any length of time.

ENOW00920-0

⚠ CAUTION

When washing the outboard motor, be careful not to spray the water inside of the top cowl, especially electrical components.

ENON00026-0
Note

It is recommended to check chemical properties of water on which your outboard motor is regularly used.

If outboard motor is used in salt water, brackish water or water with high acidic level, use fresh water to remove salt, chemicals or mud. And flush cooling water passage after every use or before storing outboard motor for long time. Before flushing, remove the propeller and the forward thrust holder.

ENOM00085-A
Flushing attachment

ENOW00921-0

⚠ CAUTION

Do not operate the engine when flushing the outboard motor with a hose joint as this can cause damage to the outboard motor.

ENOW00922-0

⚠ CAUTION

To prevent the engine from starting when you are near the propeller, remove the stop switch lock.

1. Tilt down the outboard motor.
2. Remove the water plug from the gear case, and screw in the flushing attachment.
3. Connect a water hose. Turn on the water and adjust the flow (Be sure to seal the water inlet, located in the gear case with tape).
4. Put the shift lever in the neutral position and start the engine.

   Continue flushing the outboard motor for 3 to 5 minutes at idling.
5. Stop the engine and water supply. Remove the flushing attachment and tape. After the flushing, be sure to reattach the water plug.

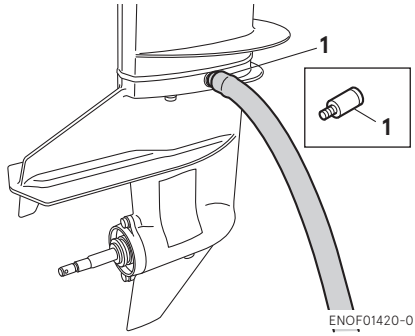

1. Flushing attachment (option)

ENOM00085-A

Flushing by test tank

ENOW00081-1

⚠ WARNING

Do not start engine without removing propeller, turning propeller out in the open may lead to personal injury.

ENOW00082-0

⚠ WARNING

Never start or operate the engine indoors or in any space which is not well ventilated. Exhaust gas contains carbon monoxide, a colorless and odorless gas which can be fatal if inhaled for any length of time.

ENOW00036-1A

⚠ CAUTION

When starting the outboard motor in the test tank, make sure that:

1. **Water level is at least 10 cm (4 in.) above the anti-ventilation plate to avoid overheating of the engine.**
2. **Run at idling only**
3. **Remove the propeller**

(See page 70)

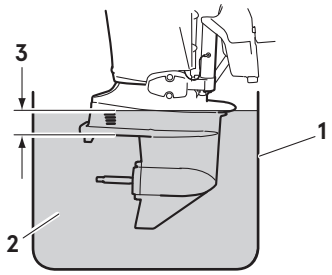

1. Test tank
2. Water
3. Over 10 cm (4 in.)

ENOM00950-1

Fuse replacement (For electrical starter type)

ENOW00923-1

⚠ CAUTION

Before replacing a fuse, disconnect the battery cable from the battery negative (-) terminal first. Failure to properly remove battery cables may cause a short-circuit.

ENOW00924-0

⚠ CAUTION

Never use a fuse with a rating that exceeds the specified rating as this could cause serious damage to the electrical system.

If the fuse has blown, try to determine the cause for this and correct it. If the cause for the problem is not corrected, the fuse will likely blown again.
If the fuse continues to blow, request an authorized Tohatsu dealer to inspect the outboard motor.

1. Stop the engine and disconnect the battery cable from the battery negative (-) terminal.
2. Remove the engine cover.
3. Remove the fuse box lid.
4. Remove the fuse and check it. If the fuse is blown, replace it with a fuse of the same specified rating. The outboard motor is supplied with spare fuses in the spare fuse holder.

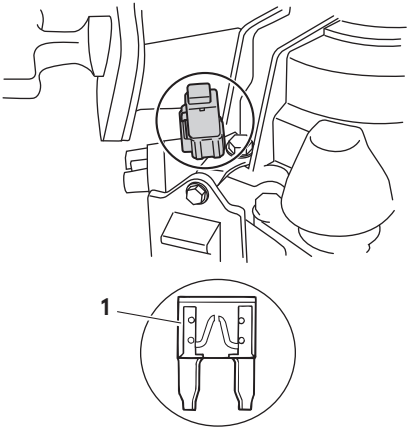

ENOF01421-0

1. Blown fuse

ENOM00555-1

2. Periodic Inspection

It is important to inspect and maintain your outboard motor regularly. Make sure to perform each service at interval specified in the chart below. Maintenance intervals are determined by the number of hours outboard motor has been used or number of months, whichever comes first.

Description		Inspection intervals				Inspection procedure	Remarks
		First 20 hours of 1 month	Every 50 hours of 3 months	Every 100 hours of 6 months	Every 200 hours of 1 year		
Fuel System	Carburetor*1			●	●	Dismantle, clean, and adjust.	
	Fuel filter	●	●	●	●	Check and replace if necessary.	Replace entire fuel filter
	Piping/Hoses	●	●	●	●	Check and replace if necessary.	
	Fuel tank	●		●	●	Check leakage Clean and eliminate water from the tank	
Ignition	Spark plug	●		●	●	Check gaps. Remove carbon deposits or replace if nessesary.	Gap: 0.80-0.9mm (0.031-0.035 in)
Starting System	Starter rope	●	●	●	●	Check for wear or chafing	
Engine	Engine oil	● Replace		● Replace		Replace	Approx.800ml (27 fl.oz)
	Valve Clearance*1	●			●	Check and adjust.	IN : 0.13-0.17mm (0.0051-0.0067 in) EX : 0.18-0.22mm (0.0071-0.0087 in)
	Timing Belt*1			●	●	Check and Replace if necessary.	
	Compression pressure*1			●		Check	
	Anode			●	●	Cleck for corrosion and deformation	
	Thermostat*1				●	Check and replace if necessary	
Lower Unit	Propeller	●	●	●	●	Check for bent blades, damage, wear.	
	Gear oil	● Replace	●	● Replace	● Replace	Replace orreplenish-oil and check for water contamination.	Approx. 320ml (10.8 fl.oz)
	Anode		●	●	●	Check and clean.	
	Water strainer	●	●	●	●	Check for wear or damage.	
	Water pump impeller*1				●	Check for wear or damage.	
Bolts and Nuts		●	●		●	Retighten	
Throttle Wire				●	●	Check and adjustment	
Sliding and Rotating Parts. Greasing Point		●	●	●	●	Check and apply grease	

*1: Have this handled by your dealer.

ENON00030-1

Note

It is highly recommended that your outboard motor to go through complete inspection at 300 hours of use.

ENOM00091-C

Engine oil replacement

ENOW00091-1

⚠ CAUTION

You may be injured due to high engine temperatures if you fill engine oil just after operation. Engine oil should be changed after the engine has been cooled.

ENOW00092-1

⚠ CAUTION

- **Do not overfill engine oil, or engine oil could leak and/or engine could be damaged. If engine oil level is over upper limit marks of dip stick, drain oil to level lower than upper limit.**
- **Be sure that outboard motor is upright when checking or changing oil.**
- **Stop the engine immediately if low oil pressure warning lamp or oil leak is found, or engine could be severely damaged. Consult your dealer.**
- **Wipe off engine oil well immediately if spilled and dispose of it in accordance with local fire prevention and environment protection regulations.**

ENOW00090-0

⚠ CAUTION

Use of engine oils that does not meet these requirements will result in reducing engine life, and other engine problems.

ENOW00933-0

⚠ CAUTION

Engine oil mixed with dust or water will dramatically shorten the life of the engine.

To change engine oil:

Be sure to use recommended engine oil.

1. Stop the engine and cool down.
2. Tilt up the outboard motor and lock the tilt with the tilt stopper.
3. Turn the steering on the outboard motor so that the drain hole is facing downward.
4. Put an oil drain pan under the oil drain screw.
5. Remove the oil drain screw and completely drain oil from the engine.

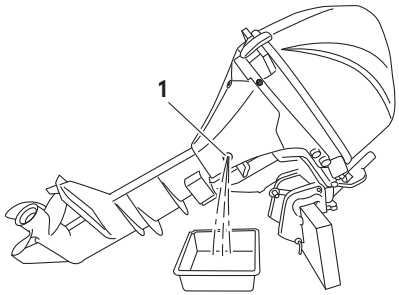

ENOF01422-1

1. Drain hole

6. Tighten the oil drain screw with applying oil on the sealing surface of screw. (Use new oil drain washer)

Oil drain screw specified torque

24N·m (17 ft·lb, 2.4 kgf·m)

7. CAUTIONReset the engine in a vertical position.
8. Repeat 2 to 7 procedures two or three times to drain the trapped oil completely.
9. Remove the top cowl and the oil filler cap.
10. Fill the engine through filler port with recommended oil.
11. Tighten the oil filler cap.

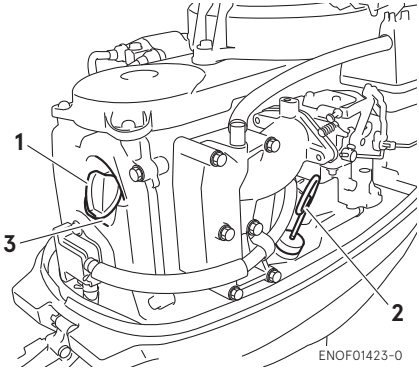

1. Filler cap
2. Dipstick
3. Filler port

1. Upper limit (Max.)
2. Lower limit (Min.)

ENON00920-0

Note

Use only recommended engine oil (See page 29).

Oil volume needed for complete oil replacement
Approximately 800 mL(27 fl.oz.)

ENOW00925-0

⚠ CAUTION

Wipe off engine oil well immediately if spilled and dispose of it in accordance with local fire prevention and environment protection regulations.

ENON00031-0

Note

- If any amount of water is found in engine oil, making it milky white, consult dealer.
- If engine oil is contaminated with fuel, emitting strong fuel smell, consult dealer.
- Some oil dilution is normal if engine is idled or trolled for long periods, especially in cooler water temperatures.

ENOM00093-A
Fuel filters and fuel tank cleaning

ENOW00093-1

⚠ WARNING

Gasoline and its vapor is very flammable and can be explosive.
- **Do not start this procedure while engine is operating or while engine is hot.**
- **Place fuel filter away from every source of ignition such as sparks or open flames.**
- **If gasoline is spilled, wipe up immediately and dispose according to the local regulations.**
- **Install fuel filter with all related parts in place, or fuel leak could occur, leading to catching fire or explosion.**
- **Check fuel system regularly for leakage.**
- **Contact authorized dealer for fuel system services. Services by unqualified person could lead to engine damage.**

Fuel filters are provided inside the fuel tank and engine.

ENOM00094-0
Fuel filter (for engine)

1. Replace the fuel filter provided inside of engine cover if there is water or dirt inside.

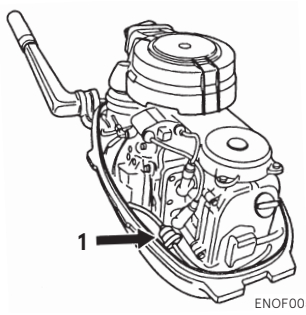

1. Fuel filter

ENOM00096-A
Fuel filter (for fuel tank)

Water or dirt in the fuel tank will cause engine performance problems.
Check and clean the tank at specified times or after the outboard motor has been stored for a long period of time (over three months).

1. Remove the fuel pickup elbow of the fuel tank by turning it counterclockwise
2. Clean the fuel filter and check the O-ring. Replace it if necessary.
3. Reassemble all parts.

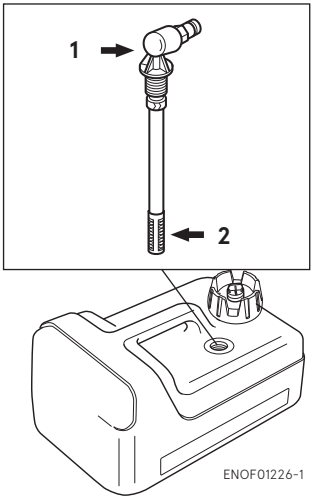

1. Fuel pick-up
2. Filter

ENOM00098-A
Gear oil replacement

ENOW00076-1

⚠ WARNING

- **Be sure that the outboard motor is secured to transom or service stand, or**

accidental drop or fall of outboard motor could lead to severe personal injury.

- **Be sure to lock the outboard motor in the tilt up position, or accidental fall of outboard motor could lead to severe personal injury.**
- **Do not go under outboard motor in the tilt up position and locked, or accidental fall of outboard motor could lead to severe personal injury.**

1. Tilt down the outboard motor.
2. Remove the oil plugs (lower and upper), and completely drain the gear oil into a pan.

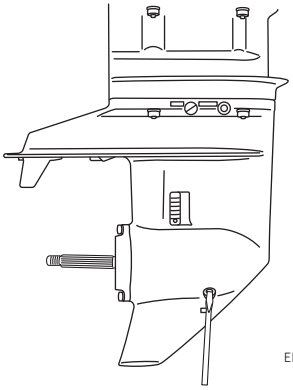

ENOF01424-0

3. Insert the oil tube nozzle into the lower oil plug hole, and fill with gear oil by squeezing the oil tube until oil flows out of the upper plug hole and bubbles is disappeared to remove the air.

ENON00033-1

Note

Use genuine gear oil or the ones recommended (API GL-5: SAE #80 to #90).
Required volume: approx. 320 mL (10.8 fl.oz.).

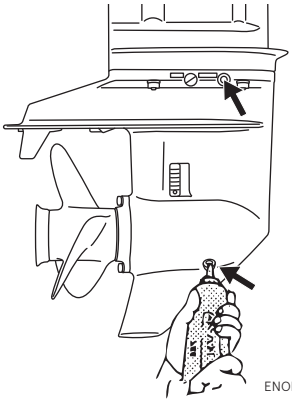

ENOF01430-0

4. Install the upper oil plug, and then remove oil tube nozzle and install the lower oil plug.

Oil plug specified tightening torque
4N·m (3 ft·lb, 0.4 kgf·m)

ENOW00095-0

⚠ CAUTION

Do not reuse oil plug gasket. Always use new gasket and tighten oil plug properly to prevent entry of water into lower unit.

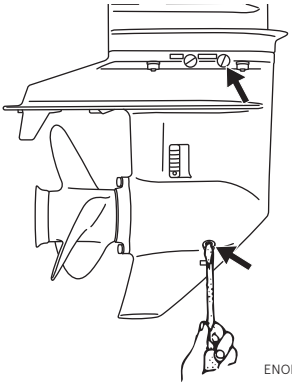

ENOF01431-0

ENOW00928-1

⚠ CAUTION

If gear oil is spilled, wipe off immediately and dispose according to the local regulations.

ENON00032-1

Note

If the gear oil color appears to be milky color, contact your dealer.

ENOM00086-A

Propeller replacement

ENOW00084-1

⚠ WARNING

- **Do not install or remove propeller on the outboard motor with spark plug caps attached, shift in forward or reverse, main switch at other than "OFF", engine stop switch lock attached to the switch, and starter key attached, or engine could accidentally start leading to serious personal injury. Disconnecting battery cable is recommended (if equipped).**
- **The propeller edge is thin and sharp. Wear the gloves while installing or removing to protect your hands.**

ENOW00086-1

⚠ CAUTION

- **Do not install propeller without thrust holder, or propeller boss could be damaged.**
- **Do not reuse split pin.**
- **After installing split pin, spread bend both end of the pin apart to lock propeller in place.**

A worn-out or bent propeller will lower the motor's performance, and cause engine trouble.

1. Put a piece of wood block between propeller blade and anti-ventilation plate to hold propeller.

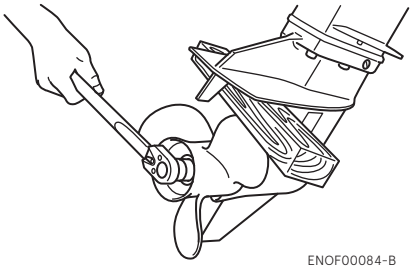

ENOF00084-B

2. Remove the split pin, propeller nut and washer.
3. Remove the propeller and thrust holder.
4. Apply waterproof grease to the propeller shaft before installing a new propeller.
5. Install the thrust holder, propeller, stopper, washer and propeller nut onto the shaft.

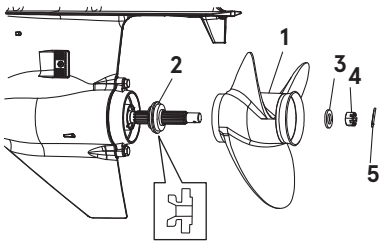

ENOF01432-0

1. Propeller
2. Thrust holder
3. Washer
4. Propeller nut
5. Split pin

6. Tighten the propeller nut to specified torque and align one of the grooves with propeller shaft hole.

Propeller nut torque:

12 N·m (9 ft·lb, 1.2kgf·m)

7. Install a new split pin into the nut hole and bend both ends of pin apart to lock propeller in place.

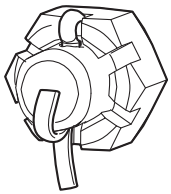

ENOF00084-E

ENOM00087-A

Spark plugs replacement

ENOW00087-1

⚠ WARNING

- **Do not reuse spark plug, if the insulation is damaged or sparks can leak through crack, potentially leading to electric shock, explosion and/or fire.**
- **Do not touch spark plug(s) immediately after stopping engine as they will be hot and could cause severe burns if touched.**

ENOW00929-0

⚠ CAUTION

Use only the recommended spark plugs. Spark plugs which have an different heat range may cause engine damage.

If the spark plug(s) is fouled, has carbon build up, or is worn, it should be replaced.

When reusing spark plugs, remove dirt from the electrodes and check the spark gap.

1. Stop the engine.
2. Remove the top cowl.
3. Remove the spark plug caps.
4. Remove the spark plugs by turning it counter-clockwise, using a 5/8" (16 mm) socket wrench and handle that are provided in the tool bag.
5. Inspect the spark plug. Replace the spark plug with wear on electrodes and if the insulators are cracked or chipped.
6. Measure the spark plug gap with a wire type feeler gauge. The gap should be 0.8-0.9 mm (0.031-0.035 inches). If the gap is out of specification, replace the spark plug with a new one

   Use spark plug NGK DCPR-6E.

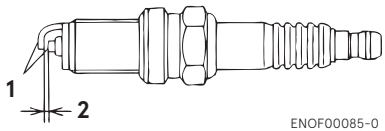

ENOF00085-0

1. Electrode
2. Spark gap (0.8–0.9 mm, 0.031–0.035 in)

7. Install the spark plug by hand and turn it carefully to avoid cross-threading.
8. Tighten the spark plug to the specified torque.

ENON00028-1

Note

- **Spark plug torque:**
  18.0 N·m (13.3 ft·lb) [1.84 kgf·m]

If a torque-wrench is not available when you are installing a spark plug, tighten it 1/4 to 1/2 a turn past finger-tight. Have the

spark plug adjusted to the correct torque as soon as possible with a torque-wrench.

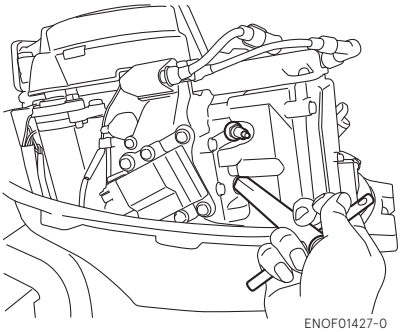

ENOM00088-1A

Anode replacement

A sacrificial anode protects the outboard motor from galvanic corrosion. Anode is located on the gear case, cylinder etc.. When the anode is eroded more than 1/3 of original size, replace it.

ENON00029-1

Notes

- Never grease or paint the anode.
- At each inspection, re-tighten all the anode attaching bolts. Those bolts may loosen if the anodes are corroded.

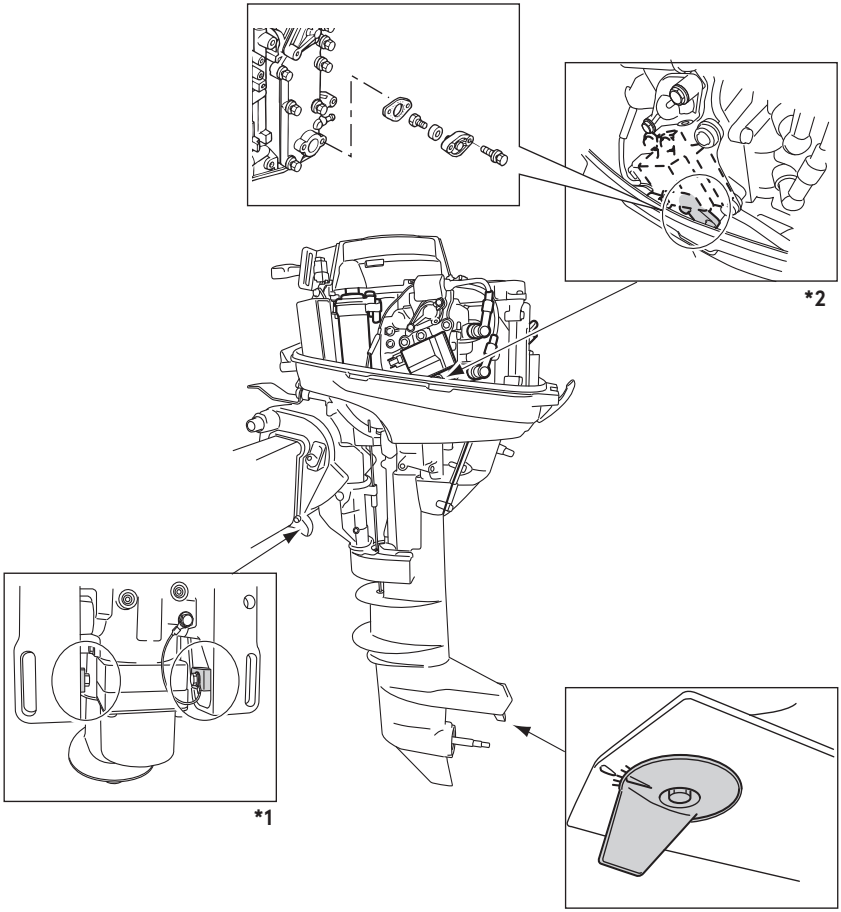

ENOF01428-0

*1 : Only for Power tilt model
*2 : Remove CD unit to access the anode.

ENOM00089-B

Power Tilt oil checking

ENOW00088-0

⚠ WARNING

- **Be sure that outboard motor is secured to transom or service stand, or accidental drop or fall of outboard motor could lead to severe personal injury.**
- **Be sure to lock outboard motor if it is tilted up, or accidental fall of outboard motor could lead to severe personal injury.**
- **Do not go under outboard motor tilted up and locked, or accidental fall of outboard motor could lead to severe personal injury.**

ENOW00089-A

⚠ CAUTION

Do not unscrew the oil cap with the outboard motor tilted down. Pressurized oil in the oil tank may spurt out.

Check the oil level in the reservoir tank while the tank is kept in a vertical position.

1. Tilt the outboard motor up and lock the tilt with the tilt stopper.
2. Remove the oil cap by turning counter-clockwise, then check if the oil level reaches the bottom line of the plug hole.

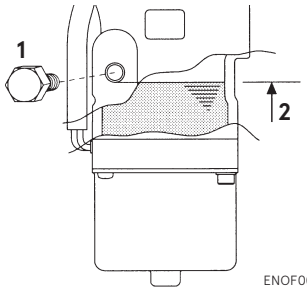

ENOF00558-0

1. Oil cap
2. Oil level

Recommended oil

Use automatic transmission fluid or equivalent.

Recommended oil is as shown below.

ATF Dexron III

Air purging from the Power Trim and Tilt unit.

Trapped air in the Power Tilt unit will cause poor tilting movement and noise.

1. With the outboard motor installed on the boat, set the manual release valve to the Manual side, and tilt the outboard motor up/down manually 5-6 times.
2. When done, close the valve by turning it clockwise.

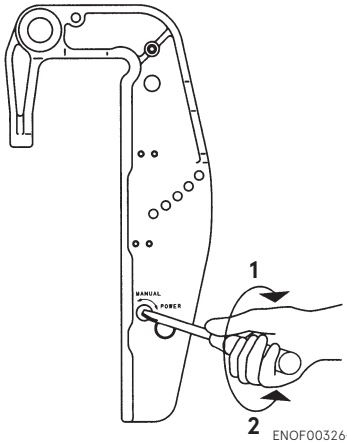

ENOF00326-0

1. POWER
2. MANUAL

Manual relief valve specified tightening torque

2 N·m (1.5 ft·lb, 0.2 kgf·m)

ENOM00960-1

Grease point

Apply waterproof grease to the parts shown below.

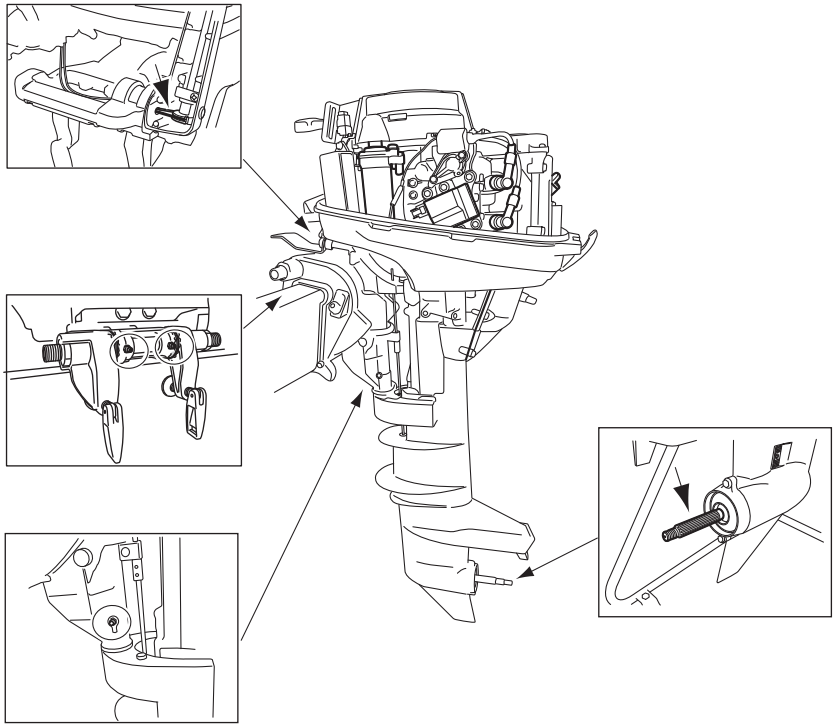

ENOF01429-0

ENOM00100-A

3. Off-season storage

ENOW00934-0

⚠ WARNING

- **Be sure to disconnect fuel connector except when operating engine.**
- **Fuel leakage is a fire or explosion hazard, which can cause serious injury or death.**

ENOW00097-0

⚠ WARNING

Be sure to use cloth to remove fuel remaining in the cowl and dispose of it in accordance with local fire prevention and environment protection regulations.

ENOW00096-0

⚠ CAUTION

Before servicing the motor for storage:
- **Remove the battery cables.**
- **Remove the spark plug caps from the spark plugs.**
- **Do not run the motor out of the water.**

Before you put your outboard motor in storage, it is a good opportunity to have it serviced by your dealer.
Be sure to use fuel stabilizer while running the motor before storage. (See page 77)

ENOM00101-A

Engine

1. Wash the engine exterior and flush the cooling water system thoroughly with fresh water. Drain the water completely.
   Wipe off any surface water with an oily rag.
2. Remove the fuel hose from the outboard motor.
3. Drain all fuel from the fuel hoses, fuel pump and carburetor (See page 78), and clean these parts.
   Keep in mind that if gasoline is kept in the carburetor for a long time, gum and varnish will develop, causing the float valve to stick, restricting the fuel flow.
4. Remove the spark plugs and put a teaspoon of engine oil or spray storage oil into the combustion chamber through the spark plug holes.
5. Turn the starter motor several turns to lubricate inside the cylinder.

ENOW00930-1

⚠ WARNING

- **Be sure to remove stop switch lock to prevent the spark plugs from igniting.**
- **Put a cloth to spark plug hole and wipe up any spilled engine oil, when cranking the outboard motor.**

6. Change the engine oil (See page 66).
7. Change the gear oil in the gear case (See page 68).
8. Apply grease to grease point (See page 75).

9. Place the outboard motor in the vertical position under a dry condition.

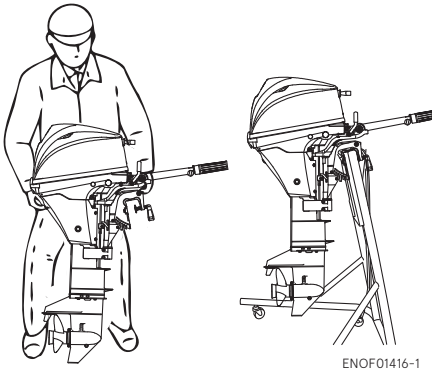
ENOF01416-1

ENOW00066-1

⚠ CAUTION

- **Do not give a shock to an outboard motor during transportation.**
- **Do not carry or store outboard motor in any of positions described below.**

Otherwise, engine's exterior may be damaged or water may enter the cylinder through the exhaust port and cause engine problems.

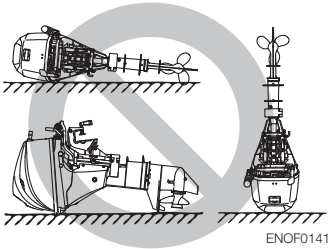
ENOF01414-1

ENON00021-3

Note

If the outboard motor must be laid down, be sure that fuel is completely drained, then lay the outboard motor with port side down on the cushion as shown in the drawing.

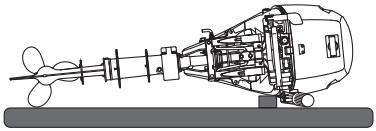
ENOF01415-0

ENOM00950-0

Adding a fuel stabilizer

When adding a fuel stabilizer additive (commercially available), first fill the fuel tank with fresh fuel. If the fuel tank is only partially filled, air in the tank can cause the fuel to deteriorate during storage.

1. Before adding fuel stabilizer additive, drain the carburetor (See page 78).
2. Follow the instructions on the label when adding the fuel stabilizer additive.
3. After adding the additive, let the outboard motor run in the water for 10 minutes to make sure any old fuel in the fuel system has been completely replaced by the fuel with additive.
4. Turn the engine OFF

ENON00891-1

Note

If your motor is used occasionally, it is recommended to use a high quality fuel stabilizer for the fuel and keep the fuel tank full to reduce condensation and evaporation.

ENOM00970-0

Fuel system draining

ENOW00028-A

⚠ WARNING

For details on handling fuel, contact an authorized dealer.

Fuel and fuel vapors are extremely flammable and can be explosive.

- **If fuel is spilled, wipe it up immediately.**
- **Keep the fuel tank well away from sources of ignition, e.g. sparks or open flames**
- **Perform all work outdoors or in a well ventilated place.**

ENOW00097-0

⚠ WARNING

Be sure to use cloth to remove fuel remaining in the cowl and dispose of it in accordance with local fire prevention and environment protection regulations.

1. Disconnect the fuel hose from the outboard motor.
2. Remove the top cowl.
3. Place an approved fuel container under the drain screw and use a funnel to avoid spilling fuel.
4. Loosen the carburetor drain screw.
5. Tilt up the outboard motor until fuel flows out of the drain hole.
6. Leave the outboard motor in this position until all fuel has been drained.
7. When thoroughly drained, retighten the drain screw securely.
8. Check the drained fuel for the presence of water or other contaminants. If either is present, refill the carburetor with fuel, and then drain the fuel again. Repeat this procedure until no water or other contaminants are present in the drained fuel.

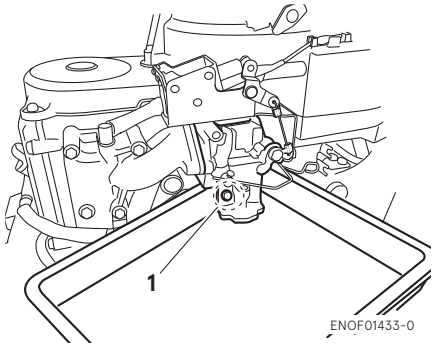

1. Carburetor drain screw

ENOM00102-0

Battery

ENOW00931-A

⚠ WARNING

- **Place the battery away from any source of fire, sparks and open flames such as burners or welding equipment.**
- **Place the battery away from fuel tank. Accidental sparks of battery may cause explosion of gasoline.**

1. Disconnect the battery cables and be sure to remove the negative terminal first.
2. Wipe off any chemical deposits, dirt, or grease.
3. Apply grease to the battery terminals.
4. Charge the battery completely before storing it for the winter.

5. Recharge the battery once a month to prevent it from discharging and the electrolyte from deteriorating.
6. Store the battery in a dry place.

ENOM00104-A

4. Pre-season check

The following steps must be taken when first using the engine after off-season storage.

1. Check that the shift and throttle function properly. (Be sure to turn the propeller shaft when checking the shift function or else the shift linkage may be damaged.)
2. Check the electrolyte level, and measure the voltage and specific gravity of the battery.

Specific Gravity at 20°C	Terminal Voltage (V)	Charge Condition
1.120	10.5	Fully discharged
1.160	11.1	1/4 charged
1.210	11.7	1/2 charged
1.250	12	3/4 charged
1.280	13.2	Fully charged

3. Check that the battery is secure and the battery cables are properly installed.
4. Change the engine oil (See page 66).
5. Before starting the engine, disconnect stop switch lock and crank approximately 10 times in order to prime the oil pump.
6. Fill fuel tank completely.
7. Start the engine and warm up the engine for 3 minutes in the "NEUTRAL" position.
8. Run the engine for 5 minutes at the slowest speed.
9. Run the engine for 10 minutes at half throttle. The oil used for storage inside the engine will be circulated out to assure optimum performance.

ENOM00105-A

5. Submerged outboard motor

ENOW00098-0

⚠ CAUTION

Do not attempt to start submerged outboard motor immediately after it is recovered, or engine could be severely damaged.

After taking your outboard motor out of the water, immediately take it to your dealer.

The following are the emergency measures to be taken for a submerged outboard motor.

1. Wash the outboard motor with fresh water to remove salt or dirt.
2. Remove the engine oil drain screw and completely drain water and oil from the engine.
3. Remove the spark plugs, and completely drain the water from the engine by pulling recoil starter several times.
   Replace oil filter and oil to the correct level.
   The oil and filter may need to be changed again after running a short period to get all moisture completely out of the crankcase.
4. Inject a sufficient amount of engine oil through the spark plug holes.
   Pull the recoil starter rope several times to circulate the oil throughout the outboard motor.

ENOM00106-1

6. Cold weather precautions

If you moor your boat in cold weather at temperatures below 0°C (32°F), water residue in water pump may freeze and may damage the pump, impeller, etc. To avoid, submerge the lower half of the outboard motor into the water.

ENOM00107-A

7. Striking underwater object

ENOW00935-0

⚠ CAUTION

Striking the sea bottom or an underwater object may severely damage the outboard motor.

Follow the procedure below and consult a dealer as soon as possible.

1. Stop the engine immediately.
2. Check the control system, gear case, boat transom etc.
3. Return to the nearest harbor slowly and carefully.
4. Consult a dealer check the outboard motor before operation again.

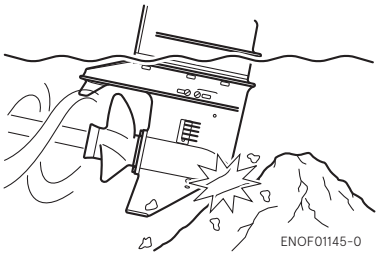

ENOM00120-2

8. Auxiliary outboard motor operation

When the auxiliary outboard motor is not in operation, be sure to remove the stop switch lock, shift into forward, and then tilt the outboard motor up. Otherwise, over-rotation of the propeller due to water spray and water ingestion that could cause damage to the outboard motor.

TROUBLESHOOTING

ENOM01109-0

If you encounter a problem, check the list below to determine the cause and to take the proper action.
An authorized dealer will always be happy to provide any assistance and information.

	Engine failing to start	Engine starting but stopping soon	Poor idling	Poor acceleration	Engine speed abnormally high	Engine speed abnormally low	Boat speed low	Overheating of engine	Warning lamp ON	Power tilt inoperative	Possible cause
FUEL SYSTEM	●	●									Empty fuel tank
	●	●	●	●		●	●	●			Incorrect connection of fuel system
	●	●	●	●		●	●	●			Air entering fuel line
	●	●	●	●		●	●	●			Deformed or damaged fuel hose
	●	●	●	●		●	●	●			Closed air vent on fuel tank
	●	●	●	●		●	●	●			Clogged fuel filter, fuel pump, or carburetor
			●	●		●	●	●			Use of improper engine oil
	●	●	●	●			●	●			Use of improper gasoline
	●	●	●	●							Excessive supply of fuel
	●	●	●	●		●	●	●			Poor carburetor adjustment
ELECTRICAL SYSTEM	●	●	●	●		●	●	●			Spark plug other than specified
	●	●	●	●		●	●				Dirt, soot, etc. on spark plug
						●			●		Faulty oil pressure switch
	●	●	●	●		●	●				No Spark or weak spark
	●										Short circuit of engine stop switch
	●		●	●			●	●			Ignition timing incorrect
	●									●	Lock plate not fitted
	●									●	Disconnection of wire or loose ground connection
	●										Blown 20 Amp fuse in the starting circuit
	●										Not shifted to neutral position
	●									●	Weak battery or battery connections are loose or corroded
	●									●	Ignition key switch failure
	●									●	Wiring or electrical connection faulty
	●										Starter motor or starter solenoid failure

	Engine failing to start	Engine starting but stopping soon	Poor idling	Poor acceleration	Engine speed abnormally high	Engine speed abnormally low	Boat speed low	Overheating of engine	Warning lamp ON	Power tilt inoperative	Possible cause
COMPRESSION & OIL SYSTEM		●	●	●		●	●				Low compression
			●					●			Carbon deposits in the combustion chamber
				●			●				Incorrect valve clearance
								●			Low oil pressure/level
ENGINE OIL SYSTEM						●		●	●		Low oil level
								●	●		Use of improper oil
						●		●	●		Oil deterioration
						●		●	●		Clogged oil strainer
						●		●	●		Faulty oil pump
OTHERS	●		●	●		●	●				Incorrect adjustment of throttle link
							●	●			Insufficient cooling water flow, clogged or defective pump
			●				●	●			Faulty thermostat
				●	●		●	●			Cavitation or ventilation
				●	●	●	●	●			Incorrect propeller selection
			●	●	●	●	●	●			Damaged or bent propeller
				●	●		●	●			Improper thrust rod position
				●	●	●	●	●			Unbalanced load on boat
				●	●	●	●	●			Transom too high or too low

ACCESSORIES KIT

ENOM00562-1

The followings are a list of the tools and spare parts provided with the motor.

Items		Quantity	Remark	
Service tools	Tool bag	1		
	Pliers	1		
	Socket wrench	1	10 × 13 mm	
	Socket wrench	1	16 mm (spark plug)	
	Socket wrench handle	1		
	Screwdrivers	1	Cross-and straight-point	
	Screwdriver handle	1		
Spare parts	Emergency starter rope	1		
	Spark plug	1	NGK: DCPR6E	
	Split pin	1		
	Stop switch lock	1		
Parts Packaged with Engine	Fuel tank	1	12 L	
	Primer bulb	1 set		
	Remote control box	1 set	EP/EPT only	
	Harness sleeve	1	EP only	12–90 mm (Tool bag)
	Bolt	4	M8 x 85 mm	EPT
	Nylon locking nut	4	8 mm	EPT
	Washer	8	8 mm	EPT
	Bolt	2	M8 x 85 mm	EP/EFT
	Nylon locking nut	2	8 mm	EP/EFT
	Washer	4	8 mm	EP/EFT
	Cable joint set	1		EP/EPT
	Cable joint	2		EP/EPT
	Washer	2	8.5-18-1.6	EP/EPT
	Snap pin	2		EP/EPT

PROPELLER TABLE

ENOM00111-0

Use a genuine propeller.

A propeller must be selected so that the engine RPM measured at wide open throttle while cruising is within the recommended range.

5000–6000 min^{-1} (rpm)

	Propeller Mark	Propeller Size (Diameter × pitch)		
		No. of Blades	in.	mm
Light boats	9.5	3	8.9 × 10	226 × 255
	8.5	3	8.9 × 8.3	226 × 211
	7.5	3	8.5 × 7.5	216 × 190
	7.0	3	8.9 × 7.0	226 × 178
Heavy boats	6.5	3	8.5 × 6.5	216 × 165

	Propeller Mark	Propeller Size (Diameter × pitch)		
		No. of Blades	in.	mm
Light boats	7.0	4	8.7 × 7.0	226 × 178
Heavy boats	5.0	4	8.7 × 5.0	221 × 127

MEMO

MEMO

MEMO

OWNER'S MANUAL

MFS 6BZ
MFS 8B
MFS 9.8B

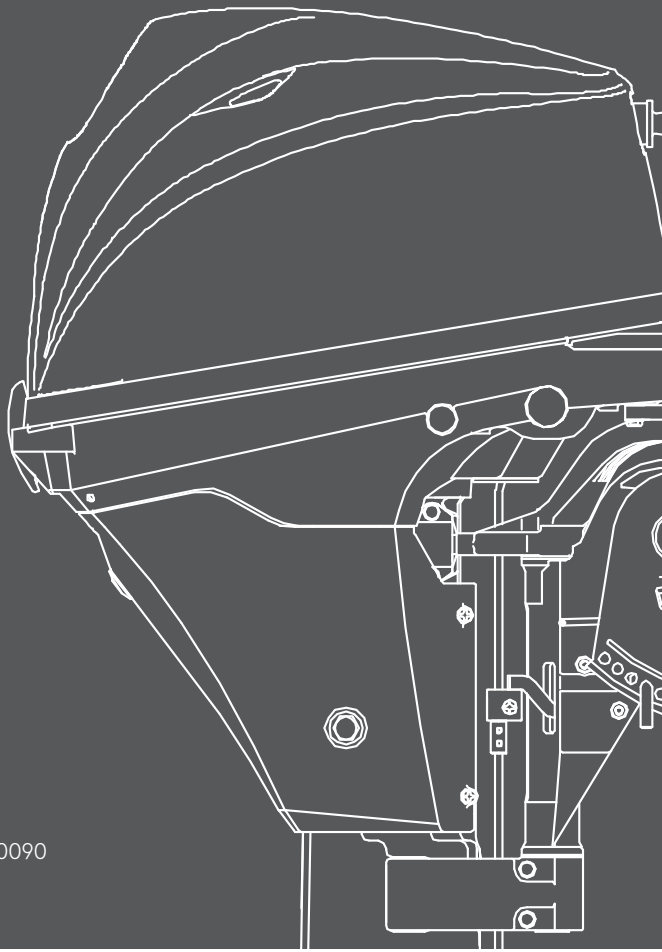

TOHATSU CORPORATION

5-4, Azusawa 3-Chome, Itabashi-Ku
Tokyo 174-0051, Japan
Tel: +81-3-3966-3117 Fax: +81-3-3966-0090
www.tohatsu.com