OWNER'S MANUAL

TOHATSU

Feel the Wind™

Original instructions

EN

MFS 4D
MFS 5D
MFS 6D

OB No.003-11154-3BB1

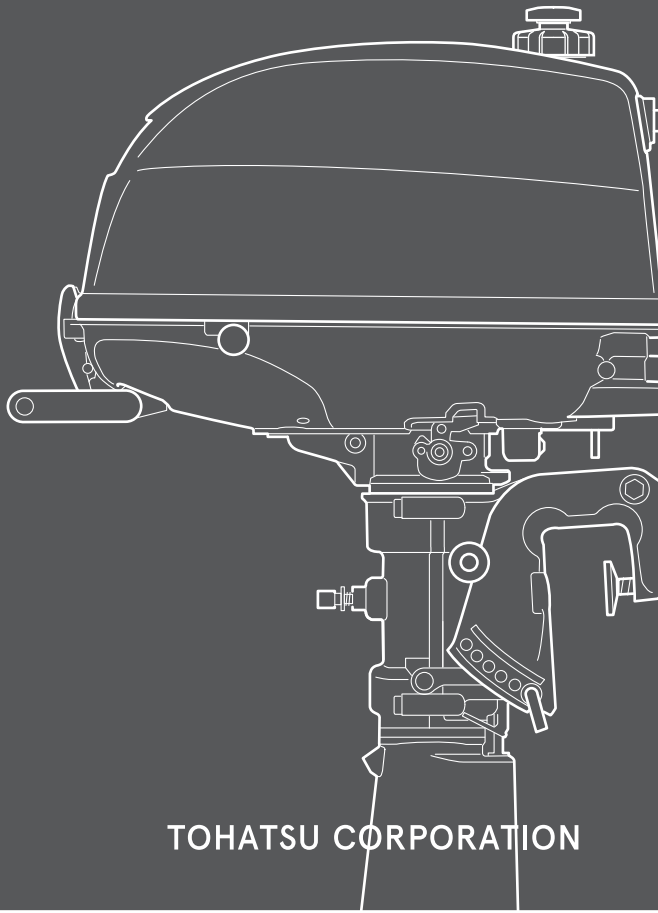

BACKS YOU UP™

TOHATSU CORPORATION

ENOM00001-0

⚠ **READ THIS MANUAL BEFORE USING THE OUTBOARD MOTOR. FAILURE TO FOLLOW THE INSTRUCTIONS AND SAFETY PRECAUTIONS IN THIS MANUAL CAN RESULT IN SERIOUS INJURY OR DEATH. KEEP THIS MANUAL IN A SAFE LOCATION FOR FUTURE REFERENCE.**

Copyright © 2022 Tohatsu Corporation. All rights reserved. No part of this manual may be reproduced or transmitted in any from or by any means without the express written permission of Tohatsu Corporation.

YOUR TOHATSU OUTBOARD MOTOR

ENOM00006-2

To You, Our Customer

Congratulations on your purchase of the TOHATSU outboard motor. You are now the proud owner of an excellent outboard motor that will serve you for many years to come. This owner's manual contains important safety, operational and maintenance information.

The efficiency and longevity of your outboard motor will depend heavily on your operating methods and periodic maintenance. Failure to operate and maintain your outboard motor according to the instruction in this owner's manual may void the limited warranty, as well as reduce the efficiency and reliability of the outboard motor.

Any person operating TOHATSU outboard motor must carefully read and fully understand the entire contents of this manual prior to operation. For safety, follow all safety warnings contained within the owner's manual and the labels applied to your outboard motor. You should keep this owner's manual where accessible while operating your outboard motor. If the outboard motor is resold, make sure the manual is passed on to the next owner. In case you encounter any problems, please contact an authorized TOHATSU service shop or dealer for assistance.

Tohatsu Corporation reserves the right to change, modify, add, or remove a part or whole of the owner’s manual without prior notice and incurring any obligations.

We are excited to take a part in your boating adventures and wish for your great and safe boating experience.

TOHATSU CORPORATION

ENOM00113-1

DECLARATION OF CONFORMITY (DoC)

This product conforms to certain portion of the European Parliament directive and UK Regulations. DoC contains the following information;

- Name and Address of the manufacturer, EU - notified body, EU - authorized representative, and UK - approved body.
- Applied community directives and regulations
- Reference standard
- Description of the product. (model name and serial number)
- Signature of the responsible person (name / title / date and place of issue).

ENOM00002-0

OWNER REGISTRATION AND IDENTIFICATION

Upon purchasing this product, be sure that the WARRANTY CARD is correctly and completely filled out and mailed to the addressee noted there on. This WARRANTY CARD identifies you as the legal owner of the product and serves as your warranty registration.

TO THE EXTENT PERMITTED BY APPLICABLE LAW, YOUR OUTBOARD MOTOR WILL NOT BE COVERED BY THE APPLICABLE LIMITED WARRANTY, IF THIS PROCEDURE IS NOT FOLLOWED.

ENOM00003-1

PRE-DELIVERY INSPECTION

Make sure Pre-delivery inspection has been properly done by authorized TOHATSU dealer before operating your outboard motor.

ENOM00005-1

Serial Number

Your outboard motor has a unique serial number. The serial number is identification of outboard motor and is located on the outboard motor as shown in the figures below. The serial number is required for warranty registration, filing a warranty claim as well as making technical inquiries and may be required for other occasions.Therefore, please write down the serial number and date of purchase in the space below.

Serial Number:

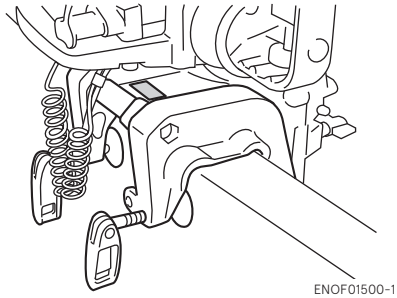

ENOF01500-1

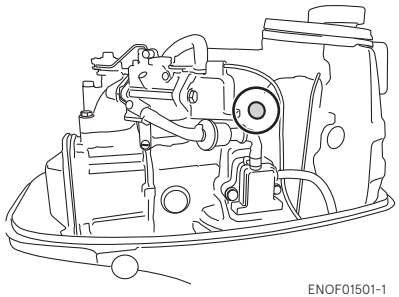

ENOF01501-1

Serial Number: Date of purchase:

ENOM00007-0

NOTICE: DANGER/WARNING/CAUTION/Note

Before installing, operating or otherwise handling your outboard motor, be sure to thoroughly read and understand this Owner's Manual and carefully follow all of the instructions. Of particular importance is information preceded by the words "DANGER," "WARNING," "CAUTION," and "Note." Always pay special attention to such information to ensure safe operation of the outboard motor at all times.

ENOW00001-0

⚠ DANGER

Failure to observe will result in severe personal injury or death, and possibly property damage.

ENOW00002-0

⚠ WARNING

Failure to observe could result in severe personal injury or death, or property damage.

ENOW00003-0

⚠ CAUTION

Failure to observe could result in personal injury or property damage.

ENON00001-0

Note

This instruction provides special information to facilitate the use or maintenance of the outboard motor or to clarify important points.

CONTENTS

1. GENERAL SAFETY INFORMATION 10
2. SPECIFICATIONS 12
3. PARTS NAME 14
4. LABEL LOCATIONS 16
5. INSTALLATION 20
   1. Mounting the outboard motor on boat 20
   2. Battery installation (For SP model) 22
6. PRE-OPERATING PREPARATIONS 24
   1. Fuel handling 24
   2. Fuel filling 25
   3. Engine oil filling 27
   4. Break-In 29
   5. Warning system 30
7. ENGINE OPERATION 32
   Before starting 32
   1. Fuel feeding 32
   2. Starting the engine 33
   3. Warming up the engine 37
   4. Forward, reverse, and acceleration 37
   5. Stopping the engine 39
   6. Steering 40
   7. Trim angle 40
   8. Tilt up and down 42
   9. Shallow water operation 43
8. REMOVING AND CARRYING THE OUTBOARD MOTOR 44
   1. Removing the outboard motor 44
   2. Carrying the outboard motor 44
   3. Trailering 45
9. ADJUSTMENT 47
   1. Steering friction 47
   2. Throttle grip friction 47
10. INSPECTION AND MAINTENANCE 48
   1. Daily Inspection 49
   2. Periodic Inspection 54
   3. Off-season storage 63
   4. Pre-season check 66
   5. Submerged outboard motor 66
   6. Cold weather precautions 67
   7. Striking underwater object 67
   8. Auxiliary outboard motor operation 67
11. TROUBLESHOOTING 68

12. ACCESSORIES KIT 70
13. PROPELLER TABLE 71

INDEX

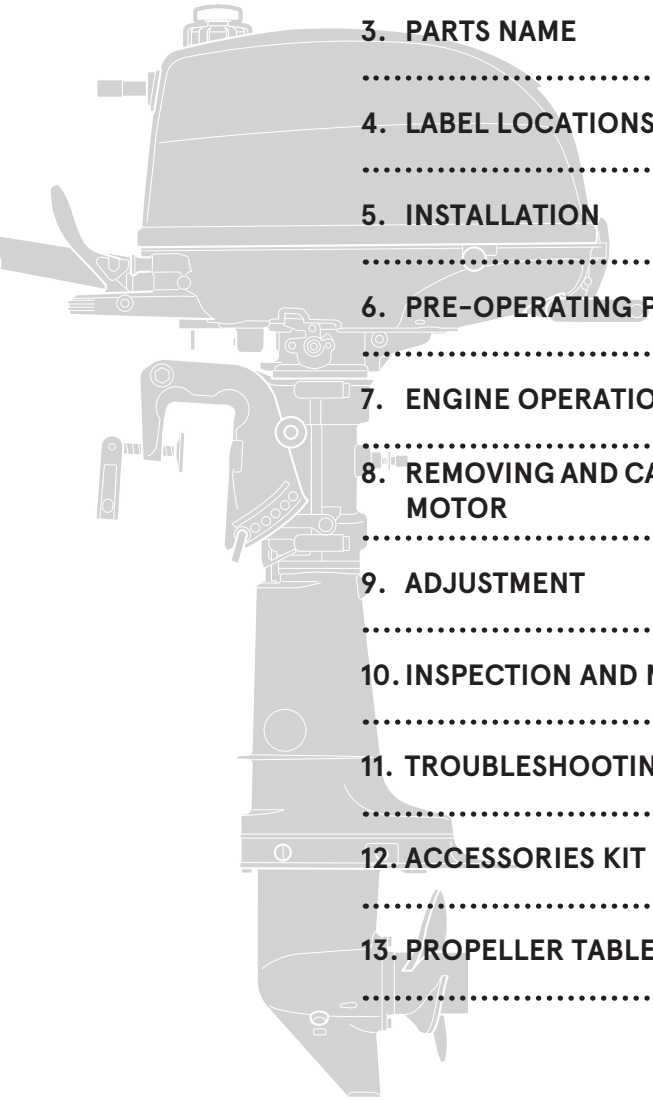

1. GENERAL SAFETY INFORMATION 1
2. SPECIFICATIONS 2
3. PARTS NAME 3
4. LABEL LOCATIONS 4
5. INSTALLATION 5
6. PRE-OPERATING PREPARATIONS 6
7. ENGINE OPERATION 7
8. REMOVING AND CARRYING THE OUTBOARD MOTOR 8
9. ADJUSTMENT 9
10. INSPECTION AND MAINTENANCE 10
11. TROUBLESHOOTING 11
12. ACCESSORIES KIT 12
13. PROPELLER TABLE 13

GENERAL SAFETY INFORMATION

ENOM00009-1

SAFE OPERATION OF BOAT

As the operator/driver of a boat, you are responsible for the safety of those aboard and those in other boat around yours, and for following local boating regulations. You should be thoroughly knowledgeable on how to correctly operate the boat, outboard motor, and accessories. To learn about the correct operation and maintenance of the outboard motor, please read through this manual carefully.
It is very difficult for a person in the water to take evasive action should he or she see a power boat heading in his/her direction, even at a slow speed.
Therefore, when your boat is in the immediate vicinity of people in the water, the outboard motor must be shifted to neutral and shut off.

ENOW00005-0

⚠ WARNING

SERIOUS INJURY IS LIKELY IF A PERSON IN THE WATER MAKES CONTACT WITH A MOVING BOAT, GEAR HOUSING, PROPELLER, OR ANY SOLID DEVICE RIGIDLY ATTACHED TO A BOAT OR GEAR HOUSING.

ENOM00247-1

STOP SWITCH LANYARD

The engine can be stopped by pulling out the stop switch lock from the stop switch. The stop switch lanyard is the coiled red cord with the stop switch lock on one end and a metal clip on the other end. With attaching the stop switch lanyard to the operator's body part or operator’s personal flotation device (PFD), the engine will stop when the stop switch lanyard is being stretched and pulled out the lock from the switch if the operator accidentally falls overboard or leaves from operator’s position. This function may prevent losing control of the boat and minimize or prevent risk of collision with other boats, people and other objects. It is operator’s responsibility to use the stop switch lanyard.

ENOW00004-1

⚠ WARNING

Accidental activation of the Stop Switch (such as the tether being pulled out in heavy seas) could cause passengers to lose their balance and even fall overboard, or it could result in loss of power in heavy seas, strong currents, or high winds. Loss of control while mooring is another potential hazard.
To minimize accidental activation of the Stop Switch, the 500 mm (20 inch.) stop switch lanyard is coiled and can extended to a full 1300 mm (51 inch.).

ENOM00800-A

PERSONAL FLOTATION DEVICE

As the operator/driver and passenger of a boat, you are responsible to wear a PFD (Personal Flotation Device) while on the boat.

ENOM00010-1

SERVICING, REPLACEMENT PARTS & LUBRICANTS

We recommend that only an authorized service shop perform service or maintenance on your outboard motor. Be sure to use genuine parts, genuine lubricants, or recommended lubricants. Be aware that the installation and use of parts not approved by Tohatsu Corporation will void warranty and may lead to unsafe operating conditions.

ENOM00011-1

MAINTENANCE

As the owner of the outboard motor, you should be acquainted with correct maintenance procedures following by maintenance section of this manual (See page 48). It is the operator's responsibility to perform all safety inspections, proper lubrication and to follow all maintenance instructions for safe operation. You should take the engine to an authorized dealer or service shop for periodic inspection at the prescribed intervals.
Correct periodic maintenance and proper care of outboard motor will reduce the chance of problems, limit overall operating expenses and contribute to longevity of your outboard motor.

Carbon Monoxide Poisoning Hazard

Exhaust gas contains carbon monoxide, a colorless and odorless gas which can be fatal if inhaled for any length of time.
Never start or operate the engine indoors or in any space which is not well ventilated.

Gasoline

Gasoline and its vapors are very flammable and can be explosive. Use extreme care when handling gasoline. You should be thoroughly knowledgeable on how to correctly handle gasoline by reading this manual.

SPECIFICATIONS

ENOM00810-A

MODEL FEATURE

Model		F4D	F5D		F6D		F6D SP*2
Type		(D) MF	(D) MF	MF	(D) MF	MF	MF
Transom heights	S	●	●	●	●	●	
	L	●	●	●	●	●	●
	UL						●
Tiller Handle		●	●		●	●	●
Remote Control *1		(●)	(●)	(●)	(●)	(●)	(●)
Separate fuel tank				●		●	●
Dual fuel tank		●	●		●		
Manual tilt		●	●	●	●	●	●

*1: Option

*2: SP model equip with charging coil as a standard.

ENOM00811-A

MODEL NAME EXAMPLE

F 6 DSUL SP

F	6	D	S	UL	SP
Model description	Horse power	Product generation	Fuel tank	Shaft length	–
F= Four stroke	-	A and up	D=Integral & Separate (Option) S=Separate	S= Short 15 in L= Long 20 in UL= Ultra long 25 in	SP= SP model SP model equip with charging coil

ENOM00401-0

MF

Item	MODEL	4D(D) 5D(D) 6D(D) (Dual Tank)	5D(S) 6D(S) (Separate Tank)	6D(S) SP (Separate Tank)
Overall Length	mm (in)	823 (32.4)		
Overall Width	mm (in)	345 (13.6)		
Overall Height S·L·UL	mm (in)	Except for USA and Canada model 1051 (41.4) 1178 (46.4) 1305 (51.4)	1030 (40.6) 1157 (45.6) 1284 (50.6)	
		For USA and Canada model 1065 (41.9) 1192 (46.9) 1319 (51.9)		
Transom Height S·L·UL	mm (in)	436 (17.2) 563 (22.2) 690 (27.2)		
Weight *3	S kg (lb)	26.0 (57)	25.5 (56)	
	L kg (lb)	26.5 (59)	26.0 (57)	
	UL kg (lb)	27.0 (60)	26.5 (59)	
Output	kW (ps)	4D : 2.9 (4) 5D : 3.68 (5) 6D : 4.4 (6)		
Max. Operating Range	min^{-1} (rpm)	4D & 5D : 4500–5500 6D : 5000–6000		
Idle Speed in Forward Gear	min^{-1} (rpm)	1150		
Idle Speed in Neutral Gear	min^{-1} (rpm)	1300		
Engine Type		4-Stroke		
Number of Cylinder		1		
Bore × Stroke	mm (in)	59 × 45 (2.30 × 1.75)		
Piston Displacement	cm^3 (Cu in)	123 (7.5)		
Exhaust System		Through hub exhaust		
Cooling System		Water cooling		
Lubrication System		Trochoid pump		
Starting System		Manual starter		
Ignition System		Flywheel Magneto C.D. ignition		
Spark Plug		NGK DCPR6E		
Alternator		12V 60W 5A (Max.) *1		
Trim Position		6		
Engine Oil	mL (fl.oz.)	API SF, SG, SH or SJ, SAE 10W-30/40, Approx. 450 (15.0)		
Gear Oil	mL (fl.oz.)	Genuine Gear Oil or API GL5, SAE #80-90, Approx. 195 (6.6)		
Fuel		Unleaded Regular Gasoline : R+M/2: 87 or higher RON: 91 or higher		
Fuel Tank Capacity	L (US gal)	1.2 (0.3) Integral *2	12 (3.2) Separate	
Gear Reduction Ratio		2.15 (28 : 13)		
Emission Control System		EM (Engine modification)		
Operator Sound Pressure (ICOMIA 39/94) dB (A)		79.0		
Hand Vibration Level (ICOMIA 38/94) m/s^2		6.8		

*1:Equipped only for SP model, the other models OPTION.
*2:In case of dual fuel tank system. Able to use together with 12 L separate tank.
Remark: Specifications are subject to change without notice.

*3 With propeller, with battery cable.

Tohatsu outboard is power rated in accordance with ISO8665 (propeller shaft output).

PARTS NAME

ENOM00402-A

4D, 5D, 6D

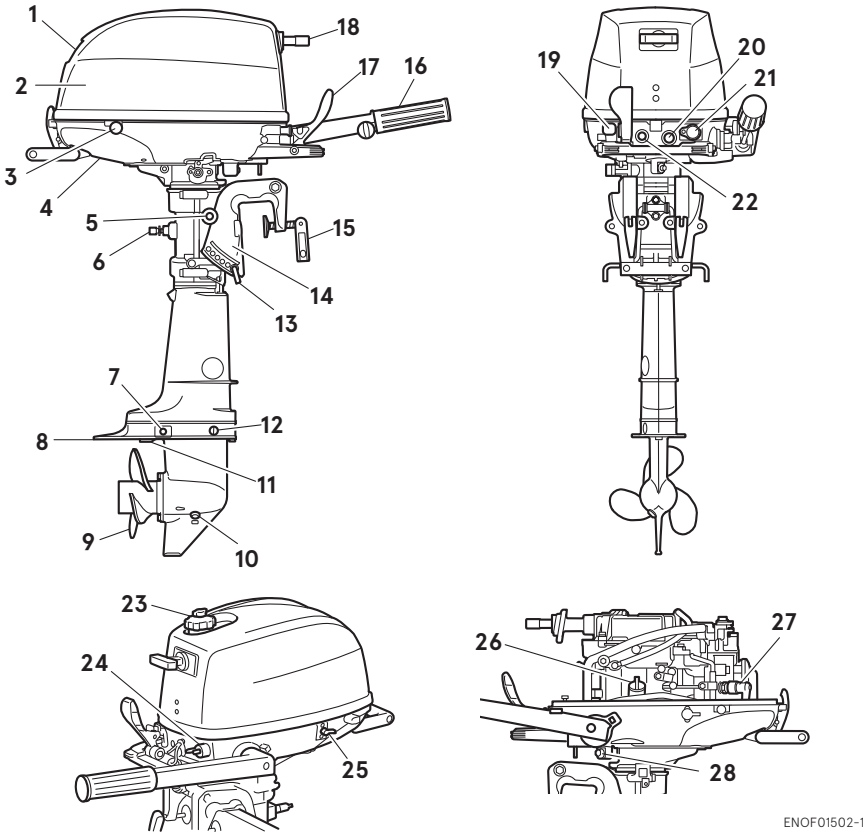

1 Tilt Handle
2 Top Cowl
3 Bottom Cowl
4 Cooling Water Check Port
5 Tilt Lever
6 Steering Adjustment Screw
7 Anode
8 Anti Ventilation Plate
9 Propeller
10 Oil Plug (Lower) (Fill)
11 Water Inlet
12 Oil Plug (Upper) (Level)
13 Thrust Rod
14 Clamp Bracket
15 Clamp Screw
16 Throttle Grip
17 Shift Lever
18 Starter Handle
19 Choke Knob
20 Stop Switch
21 Fuel Connector
22 Warning Lamp
23 Air Vent Screw
24 Fuel Connector
25 Fuel Cock
26 Engine Oil Filler Cap
27 Spark Plug
28 Engine Oil Drain Screw

ENOM00822-0

Remote control box & Fuel tank

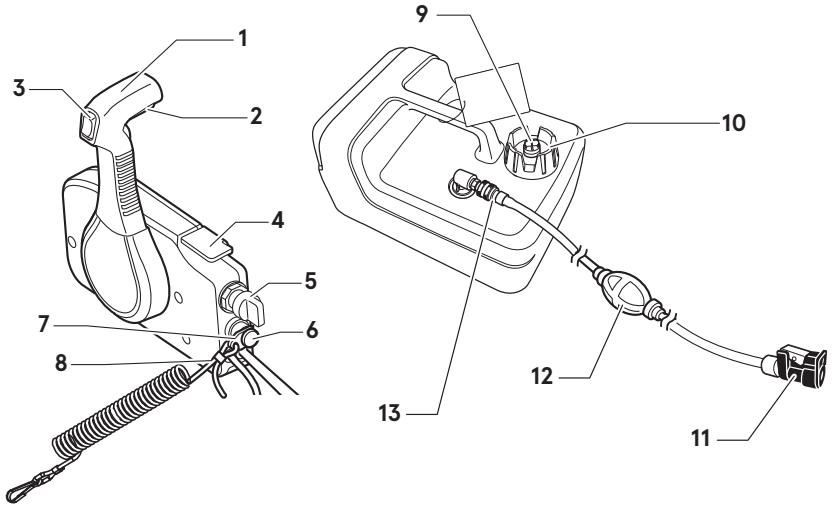

ENOF01404-2

1 Control Lever
2 Neutral lock arm
3 PTT switch
4 Free throttle lever
5 Main switch
6 Stop switch
7 Stop switch lock
8 Stop switch lanyard
9 Air vent screw
10 Fuel tank cap
11 Fuel connector (Engine side)
12 Primer bulb
13 Fuel connector (Fuel tank side)

LABEL LOCATIONS

ENOM00019-A

Warning label locations

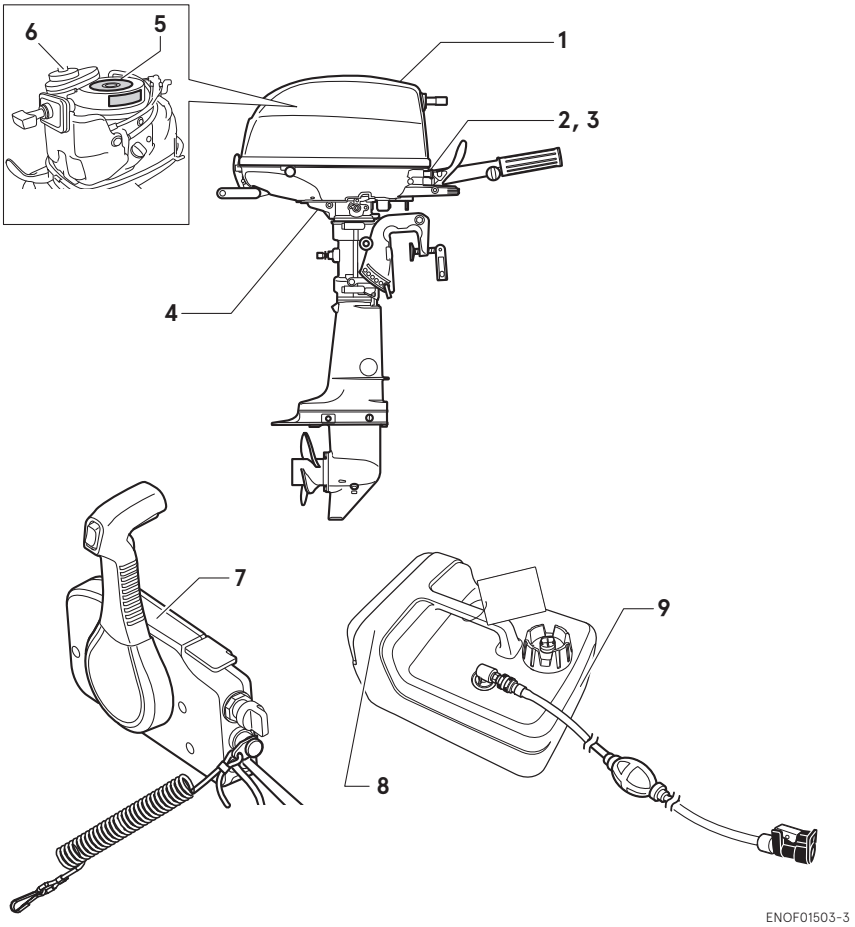

ENOF01503-3

1. Read owner's manual.

ENOF00120-0

2. Oil pressure lamp (See page 30).

ENOF00131-0

3. Engine stop switch (See page 39).

ENOF00131-B

4, 5-2. HOT SURFACE

Can cause burns.

Do not touch when operating or immediately after the engine has stopped.

3GR-76191-0

5-1. Warning regarding starting the engine (See page 33).

5-3. HAZARD CAUSED BY ROTATING PARTS

Rotating parts can cause severe injury.

Keep hands, feet, hair, and clothing away from all rotating parts to prevent injury.

5-4. ELECTRICAL SHOCK HAZARD

High voltage can cause severe electrical shock.

Do not touch electrical components such as ignition coil or spark plug cord when starting or while the engine is in operation.

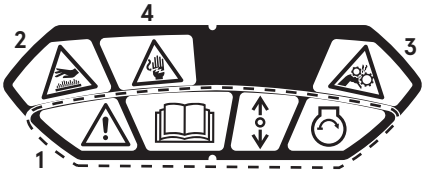

3PA-72181-100

6. Warning regarding fuel tank cap. (See page 26) (Dual tank only)

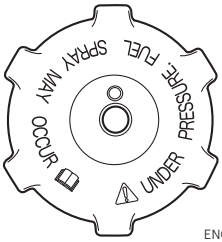

ENOF02050-0

7. Warning regarding engine stop switch.

ENOF00008-1

8. Warning regarding gasoline (See page 25).

REMOVE FROM BOAT
FOR FILLING

ENOF00005-S

9. Warning regarding gasoline (See page 25).

ENOF00005-L

ENOM00019-B

CE label locations

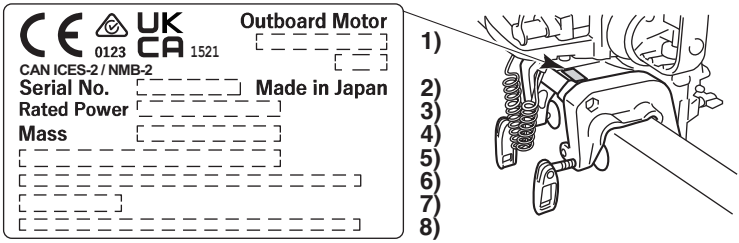

ENOF01504-3

1. Model code (Model name)
2. Serial No.
3. Rated power
4. Dry mass weight(Without propeller, with battery cable)
5. Manufacturer name
6. Manufacturer address
7. Authorised representative
8. Authorised representative address

Description of serial number year code

Last two digits of alphabet represent production year as below.

Year Code	BB	BC	BD	BE	BF
Year of manufacture	2022	2023	2024	2025	2026

INSTALLATION

ENOM00024-B

1. Mounting the outboard motor on boat

ENOW00006-1

⚠ WARNING

Most boats are rated and certified for their maximum allowable horsepower, as shown on the boat's certification plate. Do not equip your boat with an outboard motor that exceeds this limit. If in doubt, contact your dealer.
Do not operate the outboard motor until it has been securely mounted on the boat in accordance with the instructions below.

ENOW00009-2C

⚠ WARNING

- **Mounting the outboard motor without following this manual can lead to unsafe conditions such as poor maneuverability, lack of control or fire.**
- **Loose clamp screws can lead to the release or displacement of the outboard motor, possibly resulting in loss of control and/or serious personal injury. Check the clamp screws for tightness before operating your outboard.**

Keep the outboard motor in a vertical position when mounting.

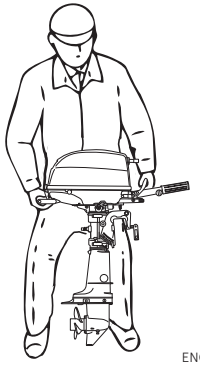

ENOF01505-1

ENOM00025-0

Position ... Above keel line

Place the outboard motor in the center of the boat's transom.

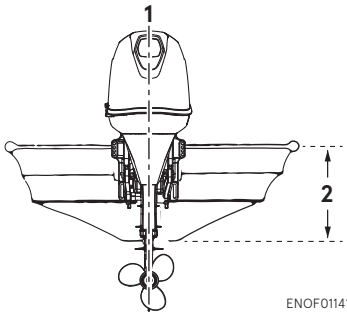

ENOF01141-0

1. Center of boat
2. Boat transom

ENOM00026-0

Transom matching

Be sure that the anti ventilation plate of the outboard motor is 5–25 mm (0.2–1 in) below the bottom of hull.
If the above condition cannot be met due to the shape of the bottom of your boat, please consult your authorized dealer.

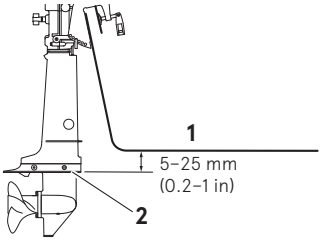

ENOF01506-0

1. Bottom of hull
2. Anti ventilation plate

ENOW00007-1A

⚠ CAUTION

- **Before running test, check the boat with maximum loading capacity. Overloading or incorrect weight distribution of the weight may result in boat to lose control, even swamping or capsizing. Make sure that there is enough distance between bottom cowl and water surface to prevent water from entering the engine.**
- **Make sure to mount the engine in correct position. If outboard motor is mounted incorrectly, water may intrude the engine from openings of the bottom cowl while cruising. Exposing the engine to such condition may result in severe damage to the engine.**
- **Tighten the clamp screws sufficiency, otherwise falling down of outboard could be happened.**

ENOM00831-0

Mounting the outboard motor

1. Set the outboard motor to appropriate position.
2. Tighten the clamp screws by turning their handles.
3. Secure the outboard motor to the boat with a rope to prevent accidental loss of the outboard motor overboard.

ENON00930-0

Note

Do not use tools to tighten clamp screws. Over tightening could result in damage to the clamp screws and clamp brackets.

ENON00002-0

Note

A rope is not included in the standard accessories.

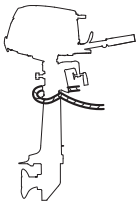

ENOF01507-A

ENOW00945-0

⚠ CAUTION

- **Please inspect whether there is a loosening of the clamp screw or mounting bolts before departure.**
- **Loosening may cause a dangerous situation, such as loss of control.**

ENOM00029-A

2. Battery installation (For SP model)

ENOW00012-1

⚠ WARNING

Battery electrolyte contains sulfuric acid and is hazardous, causes a burn if come in contact with your skin, and poisonous if swallowed.
Keep battery and electrolyte away from reach of children.
When handling the battery, be sure to:

- **Read all warnings shown on the battery case.**
- **Prevent electrolyte from coming in contact with any part of your body. Contact can cause serious burn or, if come in contact with your eye, loss of sight. Use safety glasses and rubber gloves.**

In case you came in contact with battery electrolyte:

- **For skin, flush thoroughly with water.**
- **For eye, flush thoroughly with water, and then seek immediate medical treatment.**

In case battery electrolyte is swallowed:

- **Seek immediate medical treatment.**

ENOW00013-B

⚠ WARNING

Battery generates explosive hydrogen gas. Be sure to:

- **Charge the battery in a well-ventilated place.**
- **Place the battery away from any source of fire, sparks and open flames such as burners or welding equipment.**
- **Do not charge the battery when the electrolyte level is low. Otherwise, the battery will be damaged and may cause malfunction.**

ENOW00014-0

⚠ CAUTION

- **Make sure that the battery leads do not get stuck between the outboard motor and boat when turning, etc.**
- **The starter motor may fail to operate if the leads are incorrectly connected.**
- **Be sure to correctly connect the (+) and (—) leads. If not, the charging system will be damaged.**
- **Do not disconnect the battery leads from battery while the engine is operating, the electrical parts could be damaged.**
- **Always use a fully charged battery.**

ENOW00015-1

⚠ CAUTION

Do not use a battery that is not recommended. Use of a battery not recommended can lead to poor performance of, and/or damage to the electrical system.

ENON00006-1C

Note

Minimum battery requirements: 12V 40Ah/20HR, 330 Cold Cranking Amps (CCA).
Larger capacity battery is required when it is used under a freezing condition.
Recommend connecting only the engine battery cables to the starting battery.
Specifications and features of battery vary by manufacturers.
Consult the manufacturer for details.
* The battery should be purchased separately and is not supplied with the outboard motor.

1. Connect the battery cable to the leads that come from the bottom cowl.

2. Place the battery box in a convenient position and away from possible water spray. Securely fasten both the box and the battery so they do not shake loose.
3. Connect the positive lead (+) to the positive terminal (+) of the battery, and then connect the negative lead (–). When disconnecting the battery, always remove the negative lead (–) first. After connecting the positive terminal (+), securely place a cap on it to prevent short circuits.

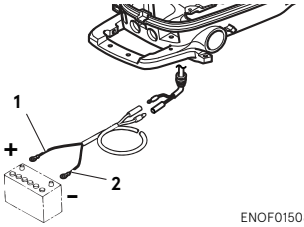

1. Battery cord (red)
2. Battery cord (black)

PRE-OPERATING PREPARATIONS

ENOM00030-A

1. Fuel handling

ENOW000017-0

⚠ CAUTION

Use of improper gasoline can damage your engine. Engine damage resulting from the use of improper gasoline is considered misuse of the engine, and damage caused thereby will not be covered under the limited warranty.

ENOM00031-1

FUEL RATING

Use only major brand unleaded fuel meeting the following specifications:

USA and Canada – having a posted pump Octane Rating of 87 (R+M)/2 minimum. Premium gasoline (92 [R+M]/2 Octane) is also acceptable. Do not use leaded gasoline.

Outside USA and Canada – Use unleaded gasoline with declared octane rating of 91 RON or over. Use of premium gasoline of 98 RON is also allowed.

ENOM00032-1

GASOLINES CONTAINING ETHANOL

The fuel system components on your TOHATSU outboard motor will withstand up to 10% ethyl alcohol (hereinafter referred to as the "ethanol") content in the gasoline. If the gasoline in your area contains ethanol, be aware of certain adverse effects that can occur. Increasing the percentage of ethanol in the fuel can also worsen these adverse effects. Some of these adverse effects are caused by ethanol absorbing moisture in the air, which leads to separation of the water/ethanol from the gasoline in the fuel tank.

Use of gasoline containing ethanol may accelerate:

- Corrosion of metal parts
- Deterioration of rubber or plastic parts
- Fuel permeation through rubber fuel lines
- Starting and operating difficulties

If the use of gasoline containing ethanol cannot be avoided or presence of ethanol is suspected in the gasoline, it is recommended to use a filter to separate water, and frequently check the fuel system for leaks, mechanical parts for corrosion and abnormal wear.

In case any of such abnormality is found, discontinue the use of such gasoline and contact our dealer immediately.

If the outboard motor will only be used infrequently, please see the remarks on fuel deterioration in the STORAGE chapter (P 63) for additional information.

ENOW00975-0

⚠ CAUTION

When operating an outboard motor with gasoline containing ethanol, storing gasoline in the fuel tank for long periods should be avoided. Storing gasoline for long periods creates unique problems. In cars, ethanol blended fuels are normally consumed before they can absorb enough moisture to cause problems, but boats often sit idle long enough for separation phase to take place. In addition, internal corrosion may take place during storage if ethanol washes away the oil films protecting internal components.

ENOW00018-1

⚠ WARNING

Fuel leakage can cause fire or explosion, potentially leading to severe injury or loss of life. Every part of fuel system should be inspected periodically. Inspect for fuel leak, hardness or any alteration of rubber, expansion and/or corrosion of metals especially after long term storage. In case any indication of fuel leakage or degradation in fuel system is found, replace the part immediately before using the outboard motor.

ENOM00043-F

2. Fuel filling

ENOW00976-0

⚠ WARNING

Do not fill the fuel tank over capacity. Under high temperature conditions, excessive gasoline may evaporate/leak through air vent screw when it is loose or open. Leaking of gasoline is a may lead to a dangerous fire hazard.

ENOW00028-1

⚠ WARNING

Consult an authorized dealer for details on handling gasoline, if necessary.

Gasoline and its vapor are very flammable and can be explosive.

When carrying a fuel tank containing gasoline:

- **Close the fuel tank cap and air vent screw of fuel tank cap, or gasoline may evaporate through the air vent screw and may lead to a fire hazard.**
- **Do not smoke.**

When or before refueling:

- **Be sure to remove the static electricity charged in your body before refueling.**
- **The static electricity may ignite the gasoline vapor during refueling.**
- **Stop the engine, and do not start the engine during refueling.**
- **Do not smoke.**
- **Be careful not to overfill fuel tank. Wipe up any spilled gasoline immediately.**

When or before cleaning the gasoline tank:

- **Dismount fuel tank from the boat.**
- **Place the fuel tank away from every source of ignition, such as sparks or open flames.**
- **Do the work outdoors or in a well ventilated area.**
- **Wipe up gasoline well immediately if spilled.**

After cleaning gasoline tank:

- **Wipe up gasoline well immediately if spilled.**
- **If the fuel tank is disassembled for cleaning, reassemble carefully. Incorrect assembly may cause a fuel leak, possibly leading to fire or explosion.**
- **Dispose aged or contaminated gasoline in accordance with local regulations.**

ENOW00029-1

⚠ WARNING

When opening fuel tank cap, be sure to follow the procedure described below. Fuel could blast out if the fuel tank cap is opened by using another procedure when internal pressure of fuel tank is raised by heat from sources such as sun light.

ENOW00946-0

⚠ CAUTION

Separate tank must be fixed at appropriate position so that well ventilated and tank does not move or fall down while operating.

When using integral tank

1. Before opening fuel tank cap, turn air vent screw two turns counterclockwise to release air pressure in the fuel tank.

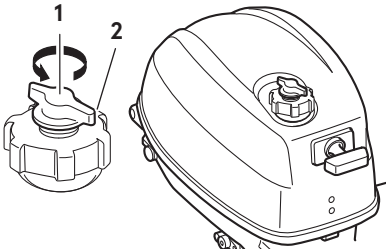

ENOF00416-B

1. Air vent screw
2. Fuel tank cap

2. Open the fuel tank cap slowly.
3. Remove top cowl and fill the fuel not to over the full mark.

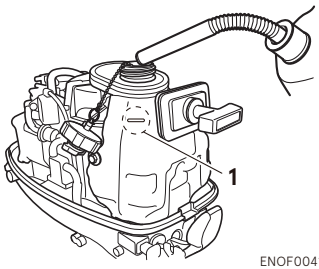

ENOF00418-0

1. Full mark

4. After filling the tank, close the fuel tank cap.

When using separate tank

1. Fully open the air vent screw on the tank cap and release internal pressure.

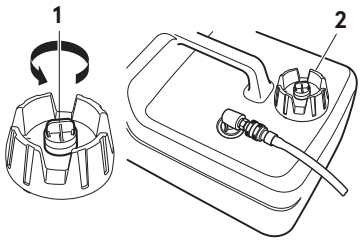

ENOF00417-1

1. Air vent screw
2. Fuel tank cap

2. Open the fuel tank cap slowly.
3. Fill the fuel carefully not to over flow.

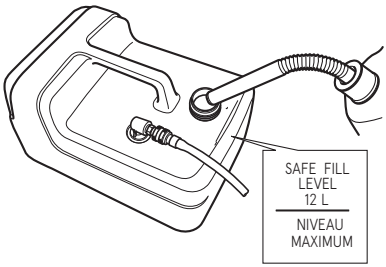

ENOF00419-A

4. After filling the tank, close the fuel tank cap.

ENOM00037-C

3. Engine oil filling

ENOW00022-2

⚠ CAUTION

The engine oil is drained for shipping at the factory. Be sure to fill the engine oil to the proper level before starting the engine.

ENOW00092-1

⚠ CAUTION

- **Do not overfill engine oil, or engine oil could leak and/or engine could be damaged. If engine oil level is over upper limit marks of dip stick, drain oil to level lower than upper limit.**
- **Be sure that outboard motor is upright when checking or changing oil.**
- **Stop the engine immediately if low oil pressure warning lamp or oil leak is found, or engine could be severely damaged. Consult your dealer.**
- **Wipe off engine oil well immediately if spilled and dispose of it in accordance with local fire prevention and environment protection regulations.**

1. Place the engine in a vertical position.
2. Remove the top cowl and the oil filler cap (dipstick).
3. Fill the engine through filler port with recommended oil to the middle of dipstick mark.
4. Tighten the oil filler cap (dipstick).

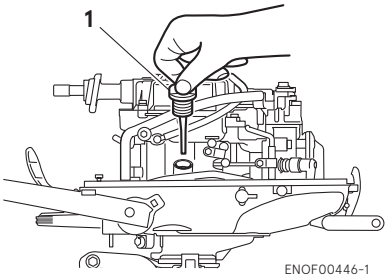

1. Oil filler cap (Dipstick)

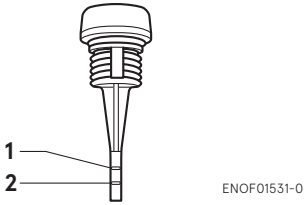

1. Upper limit
2. Lower limit

Engine oil recommendation

Use only high quality 4-stroke outboard motor oil to insure performance and prolonged engine life.

SAE: 10W-30 or 10W-40
API: SF,SG,SH or SJ

Engine oil viscosity must be selected from the following chart according to the average temperatures in your area.

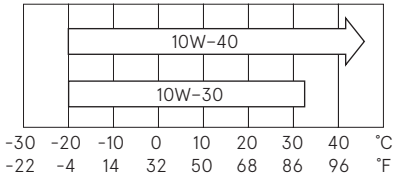

Engine oil volume
Approximately 450 mL (0.48 US qt.)

ENOW0002A-A

⚠ CAUTION

Use of engine oils that do not meet these requirements will result in reduced engine life, and other engine problems.

ENOM00033-A

4. Break-In

Your new outboard motor and lower unit require break-in for the moving components according to the conditions described in the following timetable.
Please refer to ENGINE OPERATION section (See page 32) to learn how to correctly start and operate the outboard motor.

ENOW00024-1

⚠ DANGER

Do not operate the outboard motor in closed area or area with not enough ventilation.
Exhaust gas emitted by the outboard motor contains carbon monoxide that may cause dizziness, nausea, other health problem or even death if inhaled continuously.
During operation of the outboard motor:
- **Keep peripheral area well ventilated.**
- **Always stay on the windward side of emission.**

ENOW00023-1

⚠ CAUTION

Operating the outboard motor without break-in can shorten life.
If any abnormality is experienced during the break-in:
- **Discontinue the operation immediately.**
- **Have the dealer check the product and take proper action(s) if necessary.**

ENON00008-2

Note

- During Break-in, run the outboard motor at varied RPM less than specified engine speed. Not following the procedure may result in problems and may shorten the product life.
- Break-in must be conducted under load in the water in-gear with propeller installed..

	1–10 min	10 min – 2 hrs	2–3 hrs	3–10 hrs	After 10 hrs
Throttle Position	Idle	Less than 1/2 throttle	Less than 3/4 throttle	3/4 throttle	Full throttle available
Speed		Approx. 3000 min^{-1} (rpm) max	Full throttle run allowed for 1 min every 10 min	Approx. 4000 min^{-1} (rpm). Full throttle run allowed for 2 min every 10 min	

ENOM00039-A

5. Warning system

If outboard motor encounters an abnormal condition of fault, warning lamp (LED) will be on (engine will not be stopped).

See next page for conditions which will lead to an abnormal condition or fault.

ENOM00040-D

Location of warning lamp

■ **Warning lamp (LED)**

Tiller handle models: Located on the bottom cowl.

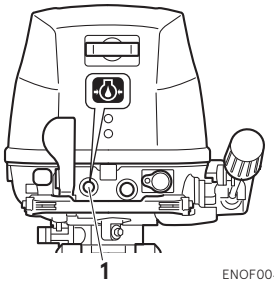

ENOF00415-1

1. Warning lamp

ENOM00041-D

Warning indicators, faults and remedy

Warning indicators			Description of faults	Remedy
Sound	Lamp (LED)	ESG		
-	On for several sec.l		Normal system test when start up	
-	-	ON	Engine speed exceeds maximum allowable RPM	**1**
-	ON	-	Low oil pressure*1	**2**

Remarks

*1: In this case, oil pressure switch is "ON".

High speed ESG (Electronic Safety Governor)

High speed ESG is a device to prevent over revolution of the engine. If the load to the engine becomes light for some reason, it runs at a higher speed than the usual. In such the case, the ESG is activated not to ignite the spark plug. Therefore, the engine speed varies and is controlled under 6300min^{-1} (rpm).

ENOM00126-A

Remedy

1. Reduce the speed to less than half open throttle, and move to safe place quickly, and stop the engine.
   Check the propeller for bent or damage on blades.
   Consult an authorized dealer if engine shows the same result even after replacing propeller with a new one.
2. Move to safe place quickly, and stop the engine until it cools down.
   Check the engine oil level, and add engine oil if necessary.
   Consult your dealer if the engine oil level is too low or too high.

ENOW00025-B

⚠ CAUTION

High speed ESG ON: Engine speed will be limited to 6300 min^{-1} (rpm) and engine will run rough until throttle is reduced.

ENOM00042-0

Before starting

ENOM00246-0

Oil Level checking

Check the engine oil level before each use. If the oil level is low or too high, the life of the engine will be shortened significantly (To properly check the engine oil level, follow the instructions, see page 50).

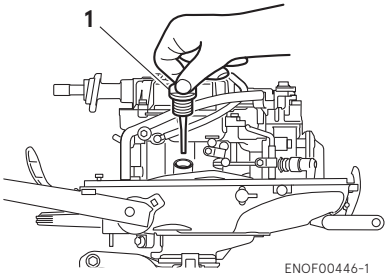

1. Oil filler cap (Dipstick)

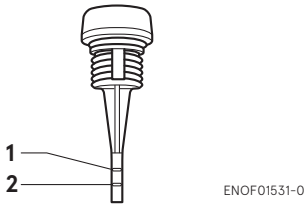

1. Upper limit
2. Lower limit

ENOW00027-D

⚠ CAUTION

Before starting engine for the first time after reassembling engine or off-season storage, disconnect stop switch lock and crank approximately 10 times in order to circulate oil through the engine.

ENOM00044-C

1. Fuel feeding

ENOW00029-1

⚠ WARNING

When opening fuel tank cap, be sure to follow the procedure described below. Fuel could blast out if the fuel tank cap is opened by using another procedure when internal pressure of fuel tank is raised by heat from sources such as sun light.

ENOW00403-0

⚠ CAUTION

When separate tank is used for dual tank model, be sure to open air vent of integral tank as well as air vent of separate tank. If air vent of integral tank that contains fuel is closed, swelling of air in the tank by heat from engine can cause increase of internal pressure of the tank dangerously.

1. **When using integral tank**
   Loosen the air vent screw on the tank cap by two turns.
   When using separate tank
   Fully open the air vent screw on the tank cap.
2. Open the fuel tank cap slowly and release internal pressure completely. After that, close the fuel tank cap.
3. Set fuel cock lever to which you would like to use.

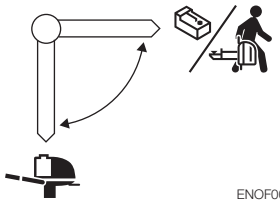

ENOW00404-0

⚠ CAUTION

When using integral tank, disconnect fuel connector.

ENOW00947-0

⚠ CAUTION

When using a separate tank, be sure that the fuel line is not kinked and is connected securely.

4. If you use a separate tank, connect the fuel connector to the engine side with pushing fuel connector lever.

   And then, connect the fuel connector to the fuel tank side.

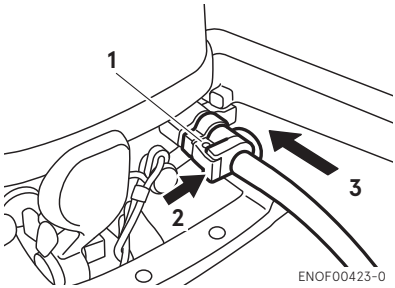

1. Fuel connector
2. Push
3. Insert

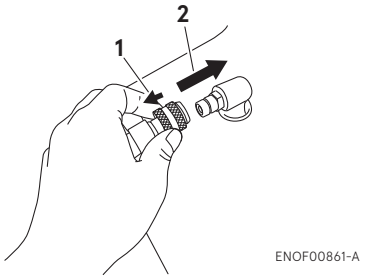

1. Pull
2. Insert

5. Squeeze primer bulb until it becomes stiff to feed fuel to carburetor. Point the arrow mark upward when priming.

1. Engine side
2. Fuel tank side

Do not squeeze primer bulb while engine running or when the outboard motor is tilted up to avoid fuel from overflowing.

ENOM00045-C

2. Starting the engine

ENOW00958-1

⚠ WARNING

- **Do not remove or install the top cowl after the engine has started.**
- **The exposed rotating engine parts cause serious injury.**

ENOW00959-0

⚠ CAUTION

The top cowl must be installed while the engine running except in an emergency. If the top cowl is not installed correctly, water splash can damage the engine.

ENOW00036-1A

⚠ CAUTION

When starting the outboard motor in the test tank, make sure that:

1. **Water level is at least 10 cm (4 in.) above the anti-ventilation plate to avoid overheating of the engine.**
2. **Run at idling only**
3. **Remove the propeller (See page 58).**

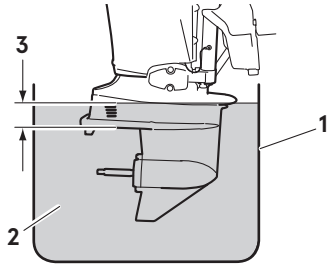

ENOF00863-0

1. Test tank
2. Water
3. Over 10 cm (4 in.)

ENOW00036-1

7

⚠ CAUTION

Operating outboard motor without cooling water will lead to overheating and damage on the outboard motor severely. In case the cooling water check port is not discharging water, stop the outboard motor immediately, check for any object, debris which may be blocking the cooling water check port. If you are unable to locate the cause, consult an authorized dealer immediately.

ENOW00032-B

⚠ CAUTION

Do not try to crank after engine has started.

This model is provided with start in gear protection.

ENON00010-1

Note

Start-in-gear protection prevents the engine from starting at other than neutral shift. In-gear starting of engine will move the boat immediately, potentially leading to fall down or causing passenger(s) to be thrown overboard.

Tiller handle type

1. Be sure to install the stop switch lock to the stop switch, and attach the stop switch lanyard securely to the operator or to the operator's PFD (Personal Flotation Device.)

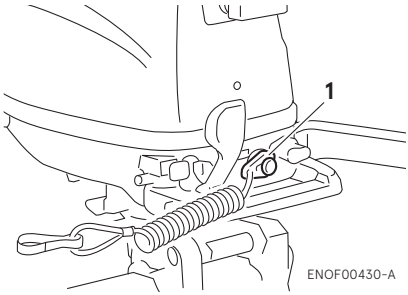

ENOF00430-A

1. Stop switch lock

2. Set the shift lever in the Neutral position.

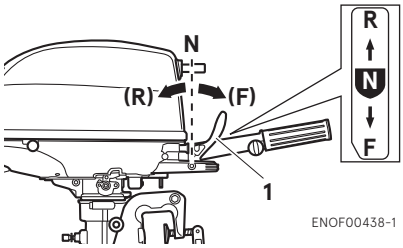

ENOF00438-1

1. Shift lever

3. Set the throttle grip to START position.

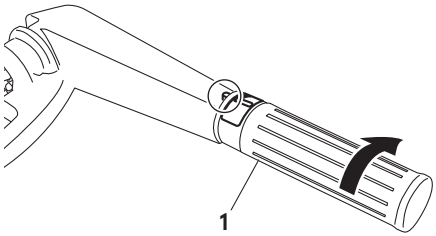

ENOF01107-0

1. Throttle grip

4. Pull the choke knob fully.

ENON00501-0

Note

Choke is not necessary when the engine is warm. Set the throttle grip to "RE-START" position.

ENON00502-0

Note

If engine does not start with 4 or 5 times starting operation, push the knob back and restart.

5. Pull the starter handle slowly until you feel engagement, keep pulling till you feel less resistance. Then pull it quickly. Repeat the procedure until the outboard motor is started.

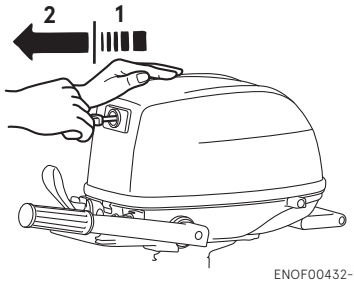

ENOF00432-1

1. Slowly
2. Quickly

ENOW00064-0

⚠ CAUTION

Engine may be hot immediately after operating and could cause burns if touched. Allow engine to cool down before attempting to carry the outboard.

6. After engine starting, return the choke knob while check the engine speeds. if the engine speeds unstable, pull the choke knob to operated.

7. Check the cooling water from cooling water check port.

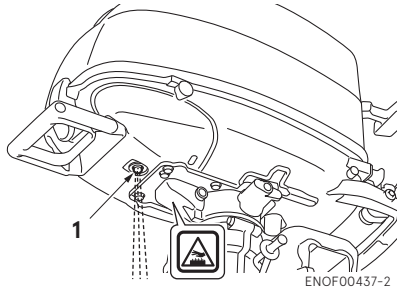

ENOF00437-2

1. Cooling water check port

ENOM00042-A

Emergency starting

ENOW00099-1

⚠ WARNING

When the emergency starter rope is used for starting engine;

- **Start in gear protection does not work. Make sure that shift is in neutral position. If the gear is in Forward or Reverse, the boat can start moving immediately and may lead to accident and personal injury.**
- **Be careful that of your clothes or other items do not to get caught in the rotating parts.**
- **To prevent accident and injury by rotating parts, do not re-attach flywheel cover or recoil starter and the top cowl after the engine has been started.**
- **Do not pull starter rope if any bystander is around.**
- **Attach engine stop switch lanyard to clothing or any part of body such as wrist, arm before starting engine the outboard motor.**

1. Remove the top cowl.

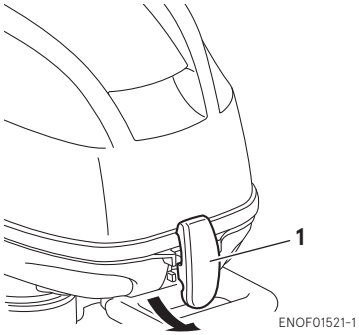

ENOF01521-1

1. Cowl latch

2. Disconnect the rink of the starter lock rod.

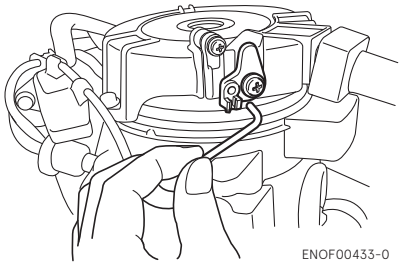

ENOF00433-0

3. Remove the bolts (3 pcs) and remove the recoil starter.

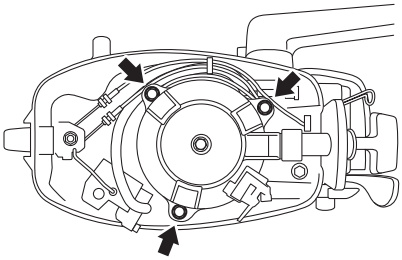

ENOF00434-0

4. Insert the knotted end of the starter rope into the notch in the flywheel and wind the rope clockwise around the flywheel several turns.

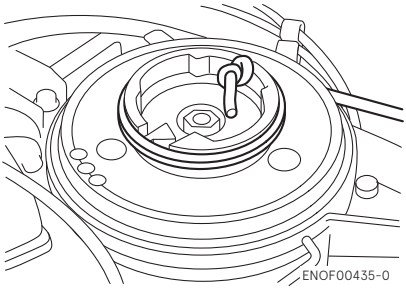

ENOF00435-0

5. Tie a loop in the another end of the emergency starter rope and attach socket wrench, Both the loop and the wrench are provided in outboard motor box.

ENOW00860-0

⚠ CAUTION

Be sure to keep the harness away from the rotation parts.

6. Be sure to install the stop switch lock to the stop switch, and attach the stop switch lanyard securely to the operator or to the operator's PFD (Personal Flotation Device.)
7. Set the control lever in the Neutral position.
8. Pull the starter handle slowly until you feel engagement, keep pulling till you feel less resistance. Then pull it quickly.

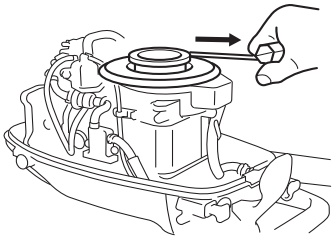

ENOF00436-0

9. Once the outboard motor is started, do not reinstall the recoil starter and top cowl.

ENOM00043-A

3. Warming up the engine

ENOW00932-1

⚠ CAUTION

Be sure to check that cooling water is discharged from the cooling water check port during warm up.

Warm the engine at low engine speeds for about
3 minutes : above 5°C (41°F)
5 minutes at 2000 min^{-1} (rpm) : below 5°C (41°F)
This allows the lubricating oil to circulate to all parts of the engine. Operating the engine without warm up shortens the engine's life.

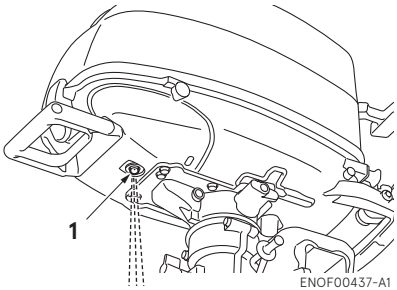

1. Cooling water check port

ENOM00044-A

Engine speeds

Idling speed after warming up.

Clutch in (In gear)	Clutch off (Out of gear)
1100 min^{-1} (rpm)	1300 min^{-1} (rpm)

ENOM00046-A

4. Forward, reverse, and acceleration

ENOW00037-1

⚠ WARNING

Before shifting into forward or reverse, make sure that boat is properly moored and outboard motor can be steered fully to the right and left. Make sure that no swimmer(s) is around of the boat.

ENOW00038-1

⚠ WARNING

- **Attach the other end of emergency stop switch lanyard to the operator's PFD (Personal Flotation device) or arm and keep it attached during cruising.**
- **Do not attach the tether to a part of clothing that can be torn easily when pulled.**
- **Arrange the tether so that will not be caught by any object when pulled.**
- **Be careful not to pull the tether accidentally during cruising. Unintentional stop of engine can cause loss of control of outboard motor. Rapid loss of engine power can lead to fall down or causing passenger(s) to be thrown overboard.**

ENOW00042-1

⚠ WARNING

- **Do not shift into Reverse during planing, or control will be lost leading to serious personal injury, boat may swamp, and/or hull may be damaged.**
- **Do not shift into Reverse during cruising, or control may be lost, fall down or causing passenger(s) to be thrown overboard. Leading to serious personal injury, and steering system and/or shifting mechanism may be damaged.**

ENOW00861-1

⚠ WARNING

Do not shift at high boat speed, or control may be lost, fall down or causing passenger(s) to be thrown overboard. Leading to serious personal injury.

ENOW00867-1

⚠ WARNING

Sudden acceleration and deceleration may cause passenger(s) to be thrown overboard or fall down.

ENOW00862-1

⚠ CAUTION

Gear and clutch damage may occur if shifting at high engine speed.
Engine must be in the slow idle position before shifting.

ENOW00863-0

⚠ CAUTION

Idle speed may be higher during warming up of engine. If shifted to Forward or Reverse during warming up, it may be difficult to shift back to neutral. In such case, stop engine, shift to neutral, and restart engine to warm up.

ENON00014-0

Note

Frequent shifting to forward or reverse can accelerate wear or degradation of parts. In such case, replace gear oil earlier than the period specified.

ENOW00864-0

⚠ CAUTION

Do not increase engine speed unnecessarily when the shift is in neutral and reverse, or engine damage may occur.

ENOM00890-A

Tiller handle type

ENOW00865-A

⚠ CAUTION

Do not force to shift when the throttle grip is not in the fully closed position, otherwise, steering system and/or shifting mechanism may be damaged.

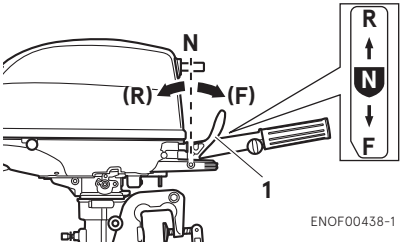

1. Shift lever

Forward

1. Turn the throttle grip to reduce engine speed.
2. When the engine reaches trolling (or idling) speed, quickly pull the shift lever to the Forward position.

Reverse

1. Turn the throttle grip to reduce engine speed.
2. When the engine reaches trolling (or idling) speed, quickly pull the shift lever to the Reverse position.

Acceleration
Open throttle grip gradually.

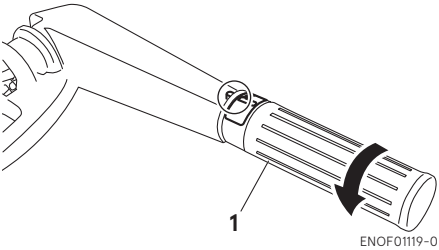

1. Throttle grip

ENOM00049-A

5. Stopping the engine

ENOW00868-1

⚠ WARNING

Be careful not to remove engine stop switch lanyard from engine accidentally while boat is running. Sudden stop of engine can cause loss of steering control, speed, possibly leading the crew(s) and or objects on the boat to be thrown forward due to inertial force.

Tiller handle type

1. Turn the throttle grip to the slow position.

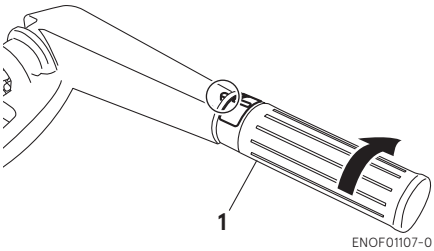

1. Throttle grip

2. Put the shift lever in the Neutral position.
   Run the engine for 2-3 minutes at idling speed for cooling down if it has been running at full speed.

3. Push the stop switch.

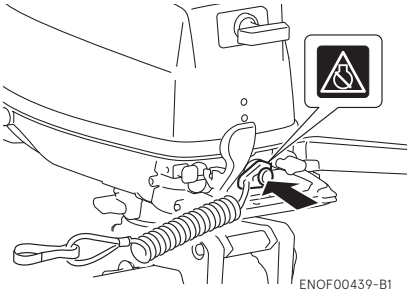

ENOW00869-1

⚠ WARNING

After stopping the engine:
- **Close the air vent screw on the fuel tank cap.**
- **Disconnect the fuel connector from the engine and the fuel tank.**
- **Disconnect the battery cable, after each use.**

Emergency engine stopping
Remove stop switch lock to stop the engine.

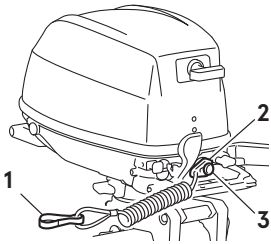

1. Hock
2. Stop switch lock
3. Stop switch

ENOM00910-1

Spare emergency stop switch lock (For CE marking model)

A spare emergency stop switch lock is provided in the accessories bag.

Make sure that spare stop switch lock is available before operating outboard motor.

When used as described, the emergency stop switch clip and emergency stop switch lanyard system stops the engine if the operator is thrown overboard. When an operator falls into water, be sure to use spare emergency stop switch lock.

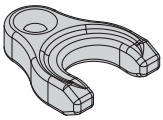

ENOF00891-0

ENOM00920-A

6. Steering

ENOW00870-1

⚠ WARNING

Sudden steering may cause passenger(s) to be thrown overboard or fall.

Tiller handle type

Right turn

Move the tiller handle to the left

Left turn

Move the tiller handle to the right.

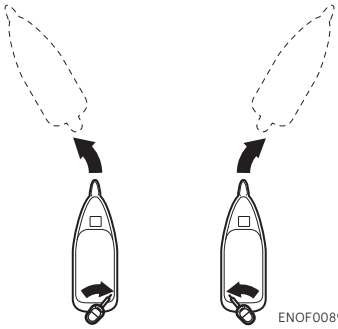

ENOF00892-0

ENOM00050-0

7. Trim angle

ENOW00043-1

⚠ WARNING

- **Adjust the trim angle when the engine is stopped.**
- **Do not put hand or finger in between outboard motor body and clamp bracket when adjusting trim angle to prevent possible injury.**
- **Unsuitable trim position can cause loss of control of boat. When testing a trim position, run the boat slowly initially to see if it can be controlled safely.**

ENOW00044-1A

⚠ WARNING

Excessive trim up or down may cause unstable boat operation, loss of control that may leads to accident during cruising.

- **For manual tilt model, If you feel the trim is improperly positioned, stop the boat and readjust trim angle before continuing to cruise.**

The trim angle of the outboard motor can be adjusted to suit the transom angle of the hull, and load conditions. Choose an appropriate trim angle that will allow the anti-ventilation plate to run parallel to the water surface during operation.

ENOM00052-0

Proper trim angle

The position of the thrust rod is correct if the hull is horizontal during operation.

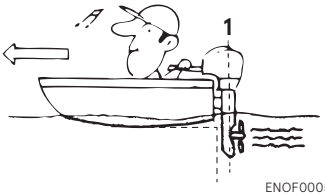

ENOF00051-1

1. Perpendicular to the water surface

ENOM00053-A

Improper trim angle (bow rises too high)

Set the thrust rod (or preset knob) lower if the bow of the boat rises above horizontal.

ENOF00052-0

ENOM00054-0

Improper trim angle (bow dips into the water)

Set the thrust rod (or preset knob) higher if the bow of the boat is below horizontal.

ENOF00053-0

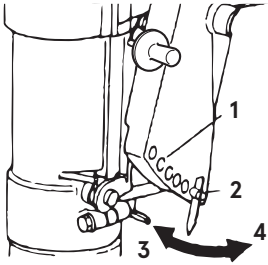

ENOF00440-0

1. Trim angle adjustment hole
2. Thrust rod
3. Higher
4. Lower

Trim angle adjustment

1. Stop the engine.
2. Shift into neutral position.
3. Tilt up the outboard motor.
4. Remove the thrust rod as shown picture.

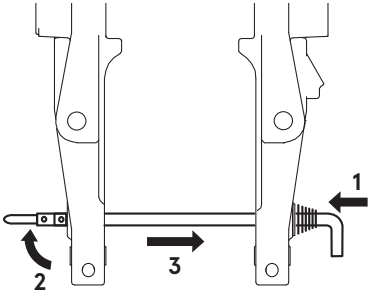

ENOF01238-1

1. Push in
2. Rise the stopper
3. Pull out

5. Reinstall the thrust rod in the desired position securely.
6. Gentry tilt down the outboard motor.

ENOM00060-A

8. Tilt up and down

ENOW00055-1

⚠ WARNING

Do not tilt the outboard motor up or down when swimmer(s) and/or passenger(s) are near to prevent them from being caught between outboard motor body and clamp bracket.

ENOW00048-1

⚠ WARNING

When tilting up or down, be careful not to place your hand between the swivel bracket and the stern bracket.

ENOW00056-A

⚠ WARNING

When tilting up outboard motor with fuel joint for over a few minutes, be sure to disconnect fuel hose, or fuel may leak, potentially catching fire.

ENOW00057-1

⚠ CAUTION

Do not tilt up the outboard motor while engine is operating, or no cooling water may be discharged, leading to engine seizure due to overheating.

ENON00921-1

Note

After use, leave the outboard motor upright for a minute to drain the water from inside the engine.

ENOM00423-0

Tilt up

With the shift lever in Forward, fully tilt the motor up toward you by holding the tilt handle provided at the rear of the top cowl. Then slightly lower the motor for locking in the up position.

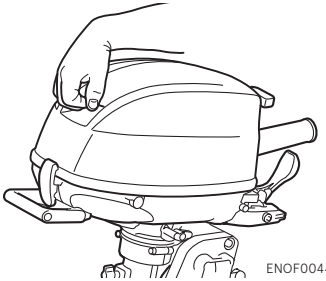

ENOF00441-1

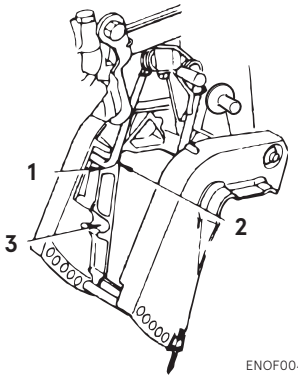

ENOF00442-0

1. Tilt up position
2. Tilt stopper
3. Shallow water running position

ENOM00424-0

Tilt down

Slightly tilt the motor up, and pull the tilt lever toward you to release the tilt-lock. Then lower the motor slowly.

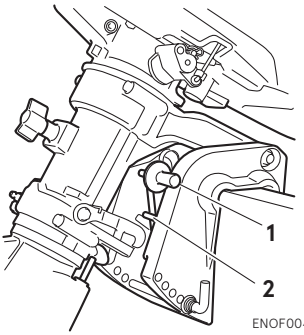

ENOF00443-0

1. Tilt lever
2. Tilt stopper

ENOM00068-A

9. Shallow water operation

ENOW00051-0

⚠ WARNING

During shallow water operation, be careful not to place your hand between the swivel bracket and the clamp bracket. Be sure to tilt the outboard motor down slowly.

ENOW00053-0

⚠ CAUTION

While in shallow water drive position, do not operate the outboard motor in Reverse. Operate the outboard motor at slow speed and keep the cooling water intake submerged.

ENOW00054-1A

⚠ CAUTION

Do not over tilt the outboard motor when driving in shallow water, or air may be sucked through water inlet, potentially leading to engine overheating.

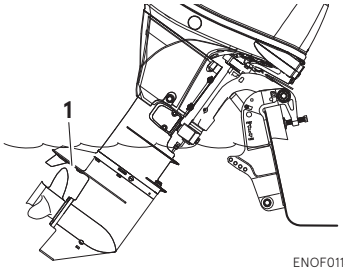

ENOF01144-A

1. Water inlet

Shallow water running position:

1. With the shift lever in Forward, tilt the motor up slowly by about 40° and then lower the tilt lever for setting at the shallow water running position.

Return to normal running position:

2. Tilt the motor up fully and then return the motor down slowly to the normal running position.

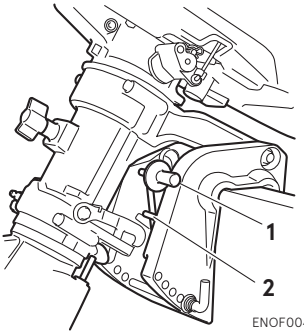

ENOF00443-0

1. Tilt lever
2. Tilt stopper

REMOVING AND CARRYING THE OUTBOARD MOTOR

ENOM00070-K

1. Removing the outboard motor

ENOW00064-1

⚠ CAUTION

Engine may be hot immediately after operation and could cause burns if came in contact. Allow engine to cool down before attempting to carry the outboard.

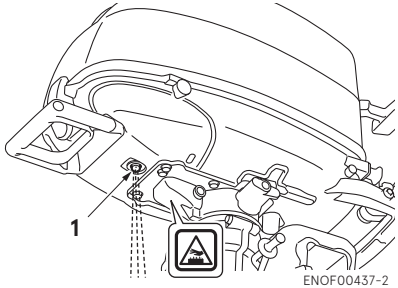

ENOF00437-2

1. Cooling water check port

1. Stop the engine.
2. Close air vent screw of fuel tank and fuel cock.
3. Disconnect the fuel connector, the remote control cables and the battery cables from the outboard motor.
4. Remove the outboard motor from boat and completely drain the water from the gear case in a vertical position.

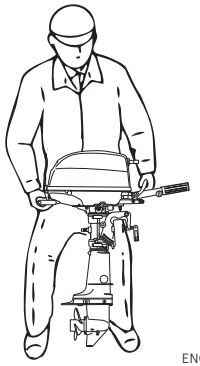

ENOF01505-1

ENOM00071-A

2. Carrying the outboard motor

ENOW00933-0

⚠ WARNING

Be sure to disconnect fuel connector except when operating engine.
Fuel leakage is a fire or explosion hazard, which can cause serious injury or death.

ENOW00065-1A

⚠ WARNING

Close air vent screw of fuel tank and fuel cock before carrying or storing outboard motor and fuel tank, or fuel may leak, potentially catching fire.

ENOW00066-1

⚠ CAUTION

- **Do not give a shock to an outboard motor during transportation.**
- **Do not carry or store outboard motor in any of positions described below.**

Otherwise, engine's exterior may be damaged or water may enter the cylinder through the exhaust port and cause engine problems.

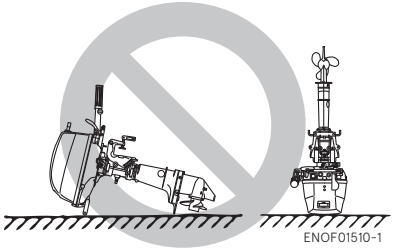
ENOF01510-1

Keep the outboard motor in a vertical position when carrying.
The optional outboard motor stand is recommended for keeping the outboard motor vertical both during transport and storage.

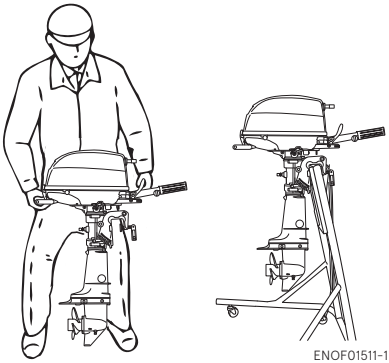
ENOF01511-1

ENOM00441-0
If the outboard motor must be laid down, be sure to drain the remaining fuel in the fuel line and carburetor (see page 64). When laying down the outboard motor, place front-side, starboard-side, or port-side down on a cushion or any softer surface shown below.

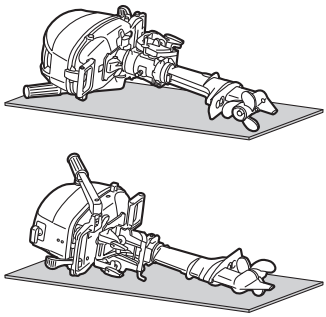
ENOF01532-0

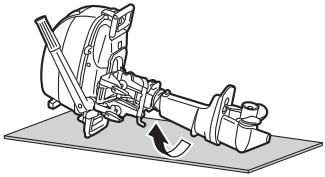
ENOF01533-0

ENON00941-0
Note

When laying the outboard front-side down, turn the clamp bracket 90° clockwise or anti-clockwise so that it does not interfere with the ground. Then tighten up the steering adjustment screw to maintain its position (see page 47).

ENOM00072-1A

3. Trailering

ENOW00072-0

⚠ CAUTION

Trailering in the tilted position may cause damage to the outboard motor, boat, etc.

ENOW00073-A

⚠ WARNING

Be sure to disconnect fuel connector except when operating engine.

8

Fuel leakage is a fire or explosion hazard, which can cause serious injury or death.

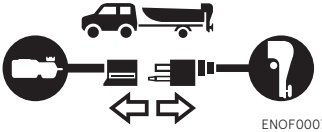

ENOF00075-1

ENOW00068-1

⚠ WARNING

Close air vent screw on fuel tank and fuel cock before carrying or storing outboard motor and/or fuel tank, or fuel may leak, potentially catching fire.

ENOW00071-0

⚠ CAUTION

The tilt support device supplied on your outboard motor is not intended for towing. It is intended to support the outboard motor while the boat is docked, beached, etc.

ENOW00072-A

⚠ CAUTION

When trailering the outboard motor should be in a vertical (normal running) position, fully down. Trailering in the tilted position may cause damage to the outboard motor, boat, etc.
If trailering with outboard motor fully down is not available (the gear case skeg is too close to the road in a vertical position), fix the outboard motor securely using a device (like a transom saver bar) in the tilted position.

When transporting a boat on a trailer with the outboard motor still attached, disconnect the fuel line from the outboard motor beforehand and keep the outboard motor in the normal running position or on a transom saver bar.

Tiller handle type

While transporting outboard motor attached to the boat on a trailer, properly tighten the steering friction bolt to prevent the outboard motor from moving (page 47).

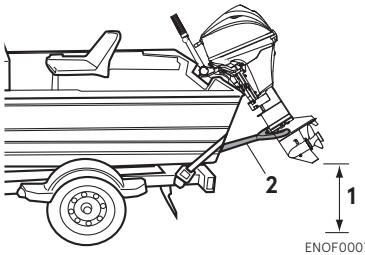

ENOF00074-B

1. Ground clearance should be provided sufficiently.
2. Transom saver bar

ENOW00067-0

⚠ WARNING

Do not go under outboard motor tilted up even if it is supported by support bar, or accidental fall of outboard motor could lead to severe personal injury.

ADJUSTMENT

ENOM00073-0

1. Steering friction

Tiller handle type

ENOW00074-1E

⚠ WARNING

Do not overtighten the steering friction adjustment screw or it could result in difficult handling of the outboard motor, resulting in the loss of control causing an accident and could lead to severe injury.

ENON00506-0

Note

The steering friction adjustment screw is used to adjust the friction load of the steering, but not to fix the steering. Excess tightening of the adjustment screw may cause damage to the swivel bracket.

ENOM00544-0

Steering friction can be adjusted in accordance with your preference by turning the steering friction adjustment screw.

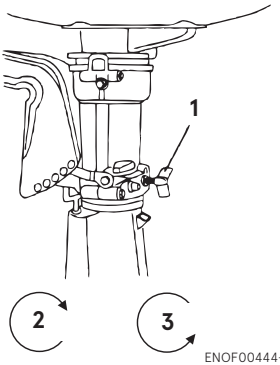

ENOF00444-A

1. Steering friction adjustment screw
2. Increase
3. Decrease

EENOM00074-A

2. Throttle grip friction

ENOW00074-1B

⚠ WARNING

Do not overtighten the throttle adjustment screw or it could result in difficult handling of the outboard motor, resulting in the loss of control causing an accident and could lead to severe injury.

Friction adjustment of the throttle grip can be made with the throttle adjustment screw.

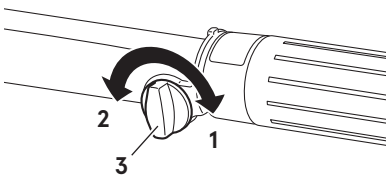

ENOF00445-A

1. Increase
2. Decrease
3. Throttle friction adjustment screw

ENOM00077-1

Care of your outboard motor

To keep your outboard motor in the best operating condition, it is very important that you perform daily and periodic maintenance as suggested in the maintenance schedules as follows.

ENOW00077-1

⚠ CAUTION

- **Your personal safety and that of your passengers depends on how well you maintain your outboard motor. Carefully read all of the inspection and maintenance procedures described in this section.**
- **The maintenance intervals shown in the checklist apply to an outboard motor in normal use. If you use your outboard motor under severe conditions such as frequent full-throttle operation, frequent operation in brackish water, or for commercial use, maintenance should be performed at shorter intervals. If in doubt, consult your dealer for advice.**
- **We strongly recommend that you use only genuine replacement parts on your outboard motor. Damage to your outboard motor arising from the use of other than genuine parts is not covered under the warranty.**

ENOM00428-0

1. Daily Inspection

Perform the following checks before and after use.

ENOW00078-1

⚠ WARNING

Do not use outboard motor if any abnormality is found during pre-operation check otherwise it could result in severe damage to the motor or severe personal injury.

Item	Points to Check	Remedy
Fuel System	· Check the amount of fuel in the tank. · Check for debris or water in the fuel filters. · Check the rubber hoses for fuel leakage.	Replenish Clean or replace Replace
Fuel Tank and Cap	· Check for crack, leakage, damage in the fuel tank and cap. · Check for crack, damage in the gasket and tether. · Check for leakage at full close.	Replace Replace Replace
Engine Oil	· Check the oil level.	Fill to the upper level mark on dipstick
Electrical Equipment	· Check that the main switch functions normally. · Check that the battery electrolyte level and specific gravity are normal. · Check for loose connections on the battery terminal. · Check that the stop switch functions normally and make sure the lock plate is secured. · Check cords for loose connections and damage. · Check the spark plug(s) for dirt, wear and carbon build-up.	Replace Replenish or recharge Retighten Remedy or replace Correct or replace Clean or replace
Throttle System	· Check carburetor linkage is working normally when turning the throttle grip.	Correct
Recoil Starter	· Check the rope for wear and chafing. · Check the ratchet engagement.	Replace Correct or replace
Clutch and Propeller System	· Check that clutch engages correctly when operating the shift lever. · Visually Check propeller for bent or damaged blades. · Check the propeller nut is tightened and the split pin is in correct position.	Adjust Replace
Installation of Motor	· Check all the bolts attaching the motor to the boat. · Check the thrust rod installation.	Tighten
Cooling Water	· After starting the outboard motor, make sure that water is being discharged from the cooling water check port.	Repair
Tools and Spares	· Check that there are tools and spare parts for replacing spark plug(s), the propeller, etc. · Check that you have the spare rope.	
Steering Devices	· Make sure that steering handle and remote control is functioning normally.	Repair
Other parts	· Check if the anode is securely installed. · Check the anode for corrosion and deformation.	Repair if necessary Replace

ENOM00081-B

Oil level checking

1. Place the engine in a vertical position.
2. Remove the top cowl and the oil filler cap (dipstick).
3. Wipe oil off the dipstick with a clean-cloth and screw the dipstic back completely.
4. Remove the dipstick again . Check the oil level on the dipstick. Oil level must be between the upper limit and lower limit shown on the dipstick.
5. Return the dipstick.

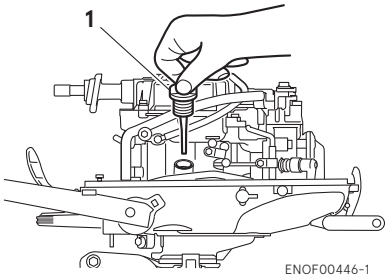

1. Oil filler cap (Dipstick)

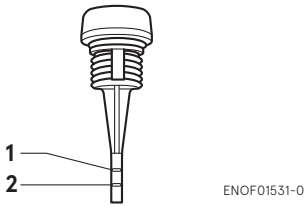

1. Upper limit
2. Lower limit

ENON00024-0

Note

The oil level should be checked when the engine is cooled.

ENON00025-0

Note

Consult with an authorized dealer if the engine oil is milky color, or appears contaminated.

ENOM00082-A

Engine oil replenishing

ENOW00079-A

⚠ CAUTION

- **Do not add engine oil of brand and grade other than existing one. In case engine oil of other brand or grade is added, drain all oil and ask dealer for treatment.**
- **In case other than engine oil such as gasoline is put in the oil chamber, empty the chamber and ask dealer for treatment.**
- **When replenishing engine oil, be careful not to allow entry of foreign matters such as dust and water into oil chamber.**
- **Wipe off engine oil well immediately if spilled and dispose of it in accordance with local fire prevention and environment protection regulations.**
- **Do not replenish engine oil over upper limit. If overfilled, remove oil to upper limit. If engine oil is over the upper limit, it can leak potentially leading to engine damage.**

If the oil level is low, or at lowest mark, add recommended oil to the middle dipstick mark.

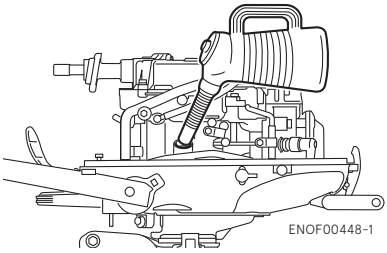

ENOM00083-B

Washing outboard motor

ENOW00081-1

⚠ WARNING

Do not start engine without removing propeller, turning propeller out in the open may lead to personal injury.

ENOW00082-0

⚠ WARNING

Never start or operate the engine indoors or in any space which is not well ventilated. Exhaust gas contains carbon monoxide, a colorless and odorless gas which can be fatal if inhaled for any length of time.

ENOW00920-0

⚠ CAUTION

When washing the outboard motor, be careful not to spray the water inside of the top cowl, especially electrical components.

ENON00026-0

Note

It is recommended to check chemical properties of water on which your outboard motor is regularly used.

If outboard motor is used in salt water, brackish water or water with high acidic level, use fresh water to remove salt, chemicals or mud. And flush cooling water passage after every use or before storing outboard motor for long time. Before flushing, remove the propeller and the forward thrust holder.

ENOM00085-A

Flushing attachment

ENOW00921-0

⚠ CAUTION

Do not operate the engine when flushing the outboard motor with a hose joint as this can cause damage to the outboard motor.

ENOW00922-0

⚠ CAUTION

To prevent the engine from starting when you are near the propeller, remove the stop switch lock.

1. Tilt down the outboard motor.
2. Remove the water plug from the bottom cowl, and screw in the flushing plug as below picture.
3. Connect a water hose. Turn on the water and adjust the flow.

   Continue flushing the outboard motor for 3 to 5 minutes.
4. After the flushing, be sure to reattach the water plug.
5. Tilt up the outboard motor.

.

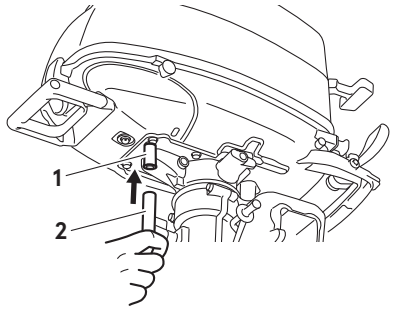

ENOF00449-A

1. Flushing plug (option)
2. Hose (commercially available)

ENOM00085-A

Flushing by test tank

ENOW00081-1

⚠ WARNING

Do not start engine without removing propeller, turning propeller out in the open may lead to personal injury.

ENOW00082-0

⚠ WARNING

Never start or operate the engine indoors or in any space which is not well ventilated. Exhaust gas contains carbon monoxide, a colorless and odorless gas which can be fatal if inhaled for any length of time.

ENOW00036-1A

⚠ CAUTION

When starting the outboard motor in the test tank, make sure that:

1. **Water level is at least 10 cm (4 in.) above the anti-ventilation plate to avoid overheating of the engine.**
2. **Run at idling only**
3. **Remove the propeller.**

(See page 58)

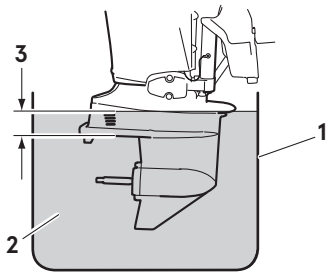

ENOF00863-0

1. Test tank
2. Water
3. Over 10 cm (4 in.)

ENOM00950-1A

Fuse replacement (for SP type)

ENOW00923-1

⚠ CAUTION

Before replacing a fuse, disconnect the battery cable from the battery negative (-) terminal first. Failure to properly remove battery cables may cause a short-circuit.

ENOW00924-0

⚠ CAUTION

Never use a fuse with a rating that exceeds the specified rating as this could cause serious damage to the electrical system.

If the fuse is blown, try to determine the cause for this and correct it. If the cause for the problem is not corrected, the fuse will likely blown again.

If the fuse continues to blow, request an authorized Tohatsu dealer to inspect the outboard motor.

1. Stop the engine and disconnect the battery cable from the battery negative (-) terminal.
2. Remove the engine cover.
3. Remove the fuse box lid.

4. Remove the fuse and check it. If the fuse is blown, replace it with a fuse of the same specified rating. The outboard motor is supplied with spare fuses in the spare fuse holder.

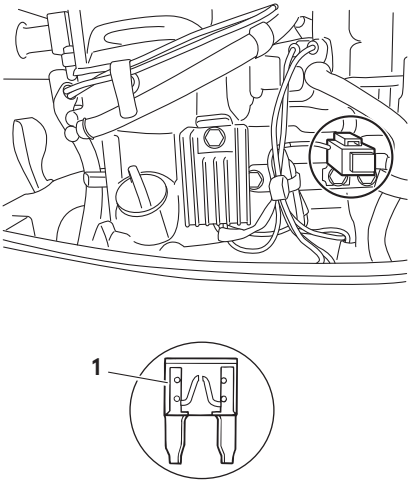

ENOF01524-0

1. Blown fuse

ENOM00431-1

2. Periodic Inspection

It is important to inspect and maintain your outboard motor regularly. Make sure to perform each service at interval specified in the chart below. Maintenance intervals are determined by the number of hours outboard motor has been used or number of months, whichever comes first.

Description		Inspection intervals				Inspection procedure	Remarks
		First 20 hours or 1 month	Every 50 hours or 3 months	Every 100 hours or 6 months	Every 200 hours or 1 year		
Fuel System	Carburetor*1			●	●	Strip, Clean, and adjust.	
	Fuel filter	●	●	●	●	Check and clean or Replace if necessary.	Entire cartridge
	Piping/Hoses	●	●	●	●	Check and clean or Replace if necessary.	
	Fuel tank	●		●	●	Clean	
	Fuel tank cap	●	●	●	●	Check and clean or Replace if necessary.	
	Fuel pump*1	●	●	●	●	Check and clean or Replace if necessary.	Disassemble and check each 300 hours.
Ignition	Spark plug	●		●	●	Check gaps. Remove carbon deposits or Replace if necessary.	0.8–0.9 mm (0.031–0.035 in)
	Ignition timing*1	●		●	●	Check timing.	
Starting System	Starter rope	●	●	●	●	Check for wear or chafing.	
Engine	Engine oil	Replace ●		Replace ●		Replace	
	Valve Clearance*1	●		●	●	Check & adjust.	IN: 0.06–0.14 mm (0.0024–0.0055 in) EX: 0.11–0.19 mm (0.0043–0.0075 in)
	Thermostat*1			●	●	Check and Replace if necessary.	
Lower Unit	Propeller	●	●	●	●	Check for bent blades, damage, wear.	
	Gear oil	Replace ●	●	Replace ●	Replace ●	Change or replenish-oil and check for water leaks.	195 mL (6.6 fl.oz)
	Water pump*1		●	●	●	Check for wear or damage.	Replace impeller every 12 months.
Warning System *1			●	●	●	Check function.	
Bolts and Nuts		●	●	●	●	Retighten	
Sliding and Rotating Parts. Grease Nipples		●	●	●	●	Apply and pump in grease.	
Outer Equipment		●	●	●	●	Check for corrosion.	
Anode			●	●	●	Check for corrosion and deformation.	Replace if necessary.

*1: Have this handled by your dealer.

ENON00030-1

Note

It is highly recommended that your outboard motor to go through complete inspection at 300 hours of use.

ENOM00091-B

Engine oil replacement

ENOW00091-1

⚠ CAUTION

You may be injured due to high engine temperatures if you fill engine oil just after operation. Engine oil should be changed after the engine has been cooled.

ENOW00092-1

⚠ CAUTION

- **Do not overfill engine oil, or engine oil could leak and/or engine could be damaged. If engine oil level is over upper limit marks of dip stick, drain oil to level lower than upper limit.**
- **Be sure that outboard motor is upright when checking or changing oil.**
- **Stop the engine immediately if low oil pressure warning lamp or oil leak is found, or engine could be severely damaged. Consult your dealer.**
- **Wipe off engine oil well immediately if spilled and dispose of it in accordance with local fire prevention and environment protection regulations.**

ENOW00090-0

⚠ CAUTION

Use of engine oils that does not meet these requirements will result in reducing engine life, and other engine problems.

ENOW00933-0

⚠ CAUTION

Engine oil mixed with dust or water will dramatically shorten the life of the engine.

To change engine oil:

Be sure to use recommended engine oil.

1. Stop the engine and cool down.
2. Turn the steering on the outboard motor left.
3. Put an oil drain pan under the oil drain screw.
4. Remove the oil drain screw and completely drain oil from the engine.

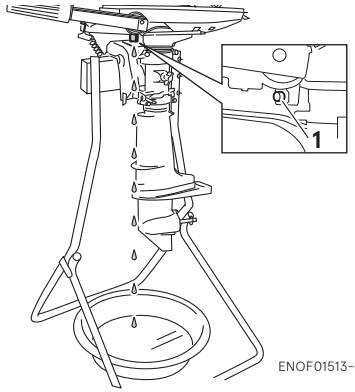

ENOF01513-0

1. Drain hole

5. Tighten the oil drain screw with applying oil on the sealing surface of screw. (Use new oil drain washer)

Oil drain screw specified torque

18N·m (13 ft·lb, 1.8 kgf·m)

6. Remove the top cowl and the oil filler cap.

7. Fill the engine through filler port with recommended oil to the middle of dipstick mark.
8. Tighten the oil filler cap (dipstick).

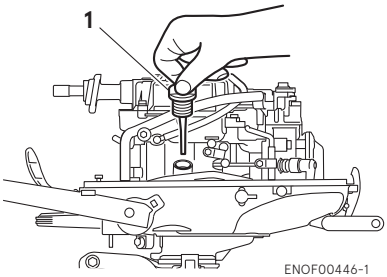

1. Oil filler cap (Dipstick)

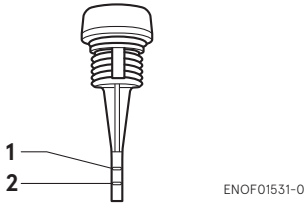

1. Upper limit
2. Lower limit

ENON00920-0

Note

Use only recommended engine oil (See page 27)

Oil volume needed for complete oil replacement
Approximately 450 mL (0.48 US qt.)

ENOW00925-0

⚠ CAUTION

Wipe off engine oil well immediately if spilled and dispose of it in accordance with local fire prevention and environment protection regulations.

ENON00031-0

Note

- If any amount of water is found in engine oil, making it milky white, consult dealer.
- If engine oil is contaminated with fuel, emitting strong fuel smell, consult dealer.
- Some oil dilution is normal if engine is idled or trolled for long periods, especially in cooler water temperatures.

ENOM00093-A

Fuel filters and fuel tank cleaning

ENOW00093-1

⚠ WARNING

Gasoline and its vapor is very flammable and can be explosive.

- **Do not start this procedure while engine is operating or while engine is hot.**
- **Place fuel filter away from every source of ignition such as sparks or open flames.**
- **If gasoline is spilled, wipe up immediately and dispose according to the local regulations.**
- **Install fuel filter with all related parts in place, or fuel leak could occur, leading to catching fire or explosion.**
- **Check fuel system regularly for leakage.**
- **Contact authorized dealer for fuel system services. Services by unqualified person could lead to engine damage.**

Fuel filters are provided inside the fuel tank and engine.

ENOM00094-0

Fuel filter (for engine)

1. Replace the fuel filter provided inside of engine cover if there is water or dirt inside.

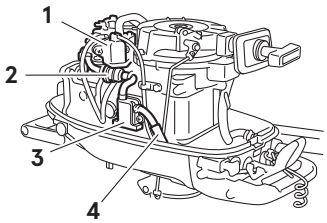

ENOF00455-1

1. Carburetor
2. Fuel filter
3. Fuel pump
4. Fuel pipe

ENOM00096-A

Fuel filter (for fuel tank)

Water or dirt in the fuel tank will cause engine performance problems.

Check and clean the tank at specified times or after the outboard motor has been stored for a long period of time (over three months).

1. Remove the fuel pickup elbow of the fuel tank by turning it counterclockwise
2. Clean the fuel filter and check the O-ring. Replace it if necessary.
3. Reassemble all parts.

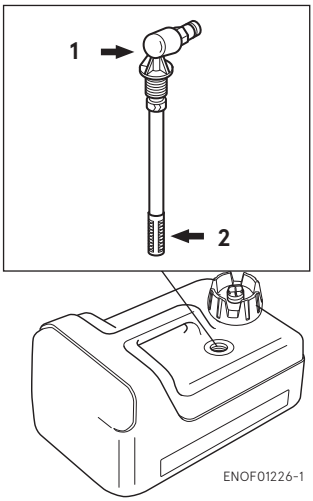

ENOF01226-1

1. Fuel pick-up
2. Filter

ENOM00098-A

Gear oil replacement

ENOW00094-0

⚠ WARNING

- **Be sure that outboard motor is secured to transom or service stand, or accidental drop or fall of outboard motor could lead to severe personal injury.**
- **Be sure to lock outboard motor if it is tilted up, or accidental fall of outboard motor could lead to severe personal injury.**
- **Do not go under outboard motor tilted up and locked, or accidental fall of outboard motor could lead to severe personal injury.**

1. Tilt down the outboard motor.
2. Remove the oil plugs (lower and upper), and completely drain the gear oil into a pan.

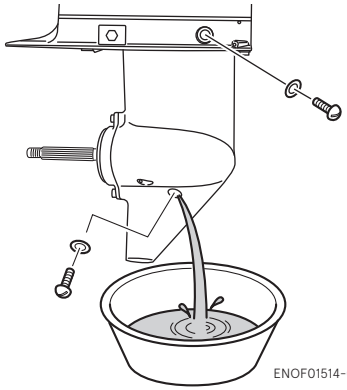
ENOF01514-0

3. Insert the oil tube nozzle into the lower oil plug hole, and fill with gear oil by squeezing the oil tube until oil flows out of the upper plug hole and bubbles is disappeared to remove the air.

ENON00033-1
Note

Use genuine gear oil or the ones recommended (API GL-5: SAE #80 to #90). Required volume: approx. 195 mL (6.6 fl.oz.).

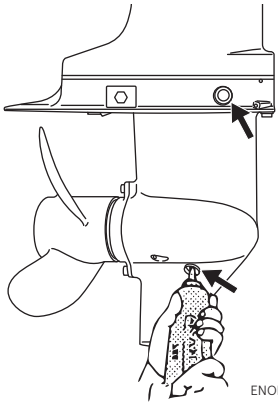
ENOF01515-0

4. Install the upper oil plug, and then remove oil tube nozzle and install the lower oil plug.

Oil plug specified tightening torque
4Nm (3 ft-lb, 0.4 kgf-m)

ENOW00095-0

⚠ CAUTION

Do not reuse oil plug gasket. Always use new gasket and tighten oil plug properly to prevent entry of water into lower unit.

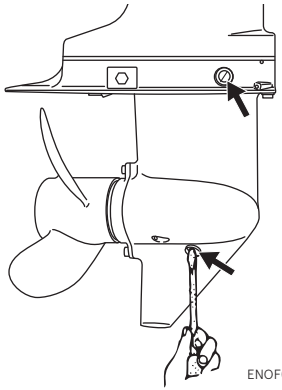
ENOF01516-0

ENOW00928-1

⚠ CAUTION

If gear oil is spilled, wipe off immediately and dispose according to the local regulations.

ENON00032-1
Note

If the gear oil color appears to be milky color, contact your dealer.

ENOM00086-A
Propeller replacement

ENOW00084-1

⚠ WARNING

- **Do not install or remove propeller on the outboard motor with spark plug caps attached, shift in forward or reverse, main switch at other than "OFF", engine stop switch lock attached to the switch, and starter key attached, or engine could**

accidentally start leading to serious personal injury. Disconnecting battery cable is recommended (if equiped).

- **The propeller edge is thin and sharp. Wear the gloves while installing or removing to protect your hands.**

ENOW00086-1

⚠ CAUTION

- **Do not install propeller without thrust holder, or propeller boss could be damaged.**
- **Do not reuse split pin.**
- **After installing split pin, spread bend both end of the pin apart to lock propeller in place.**

A worn-out or bent propeller will lower the motor's performance, and cause engine trouble.

1. Put a piece of wood block between propeller blade and anti-ventilation plate to hold propeller.

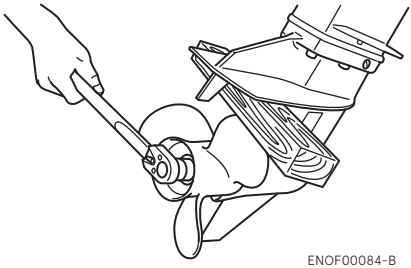

ENOF00084-B

2. Remove the split pin, propeller nut and washer.
3. Remove the propeller and thrust holder.
4. Apply waterproof grease to the propeller shaft before installing a new propeller.
5. Install the thrust holder, propeller, stopper, washer and propeller nut onto the shaft.

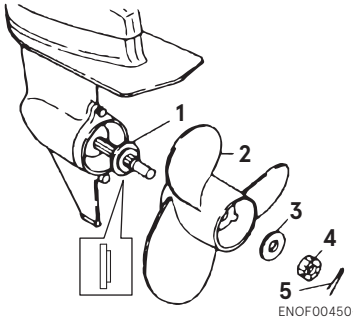

ENOF00450-A

1. Thrust holder
2. Propeller
3. Washer
4. Propeller nut
5. Split pin

6. Tighten the propeller nut to specified torque and align one of the grooves with propeller shaft hole.

Propeller nut torque:

12 N·m (9 ft·lb, 1.2 kgf·m)

7. Install a new split pin into the nut hole and bend both ends of pin apart to lock propeller in place.

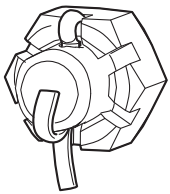

ENOF00084-E

ENOM00087-A

Spark plugs replacement

ENOW00087-1

⚠ WARNING

- **Do not reuse spark plug, if the insulation is damaged or sparks can leak through crack, potentially leading to electric shock, explosion and/or fire.**
- **Do not touch spark plug(s) immediately after stopping engine as they will be hot and could cause severe burns if touched.**

ENOW00929-0

⚠ CAUTION

Use only the recommended spark plugs. Spark plugs which have an different heat range may cause engine damage.

If the spark plug(s) is fouled, has carbon build up, or is worn, it should be replaced.
When reusing spark plugs, remove dirt from the electrodes and check the spark plug gap.

1. Stop the engine.
2. Remove the top cowl.
3. Remove the spark plug caps.
4. Remove the spark plugs by turning it counter-clockwise, using a 5/8" (16 mm) socket wrench and handle that are provided in the tool bag.
5. Inspect the spark plug. Replace the spark plug with wear on electrodes and if the insulators are cracked or chipped.
6. Measure the spark plug gap with a wire type feeler gauge. The gap should be 0.8-0.9 mm (0.031-0.035 in). If the gap is out of specification, replace the spark plug with a new one

Use spark plug NGK DCPR-6E.

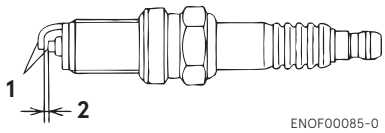

1. Electrode
2. Spark gap (0.8–0.9 mm, 0.031–0.035 in)

7. Install the spark plug by hand and turn it carefully to avoid cross-threading.
8. Tighten the spark plug to the specified torque.

ENON00028-1

Note

- **Spark plug tightening torque: 18.0 N·m (13.3 ft·lb) [1.84 kgf·m]**

If a torque-wrench is not available when you are installing a spark plug, tighten it 1/4 to 1/2 a turn past finger-tight. Have the spark plug adjusted to the correct torque as soon as possible with a torque-wrench.

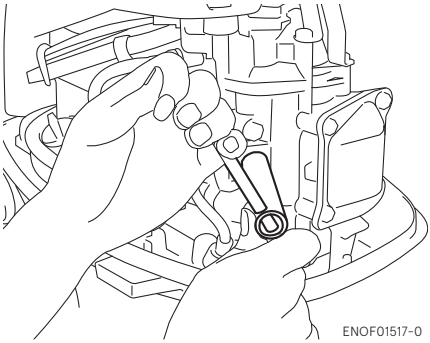

ENOM00088-1A

Anode replacement

A sacrificial anode protects the outboard motor from galvanic corrosion. Anode is located on the gear case, cylinder etc.. When the anode is eroded more than 1/3 of original size, replace it.

ENON00029-1

Notes

- Never grease or paint the anode.
- At each inspection, re-tighten all the anode attaching bolts. Those bolts may loosen if the anodes are corroded.

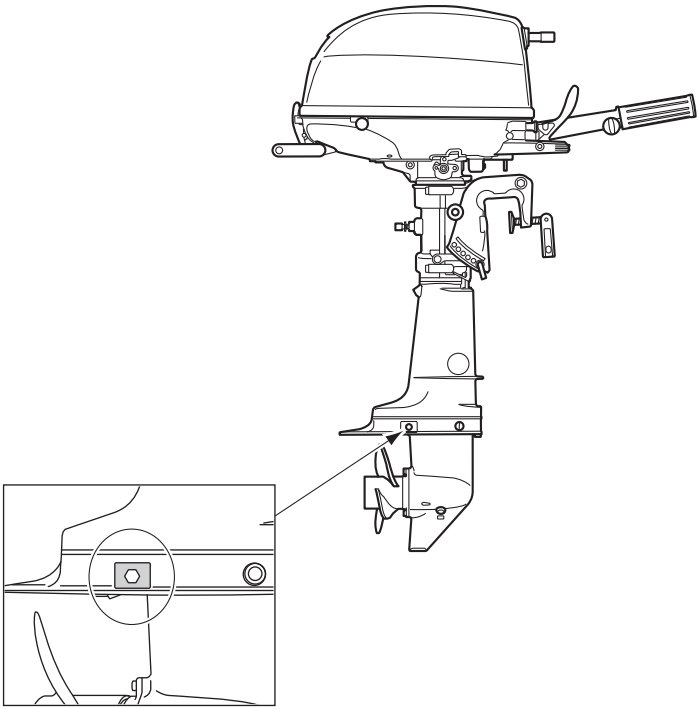

ENOF01518-1

ENOM00960-0

Grease point

Apply waterproof grease to the parts shown below.

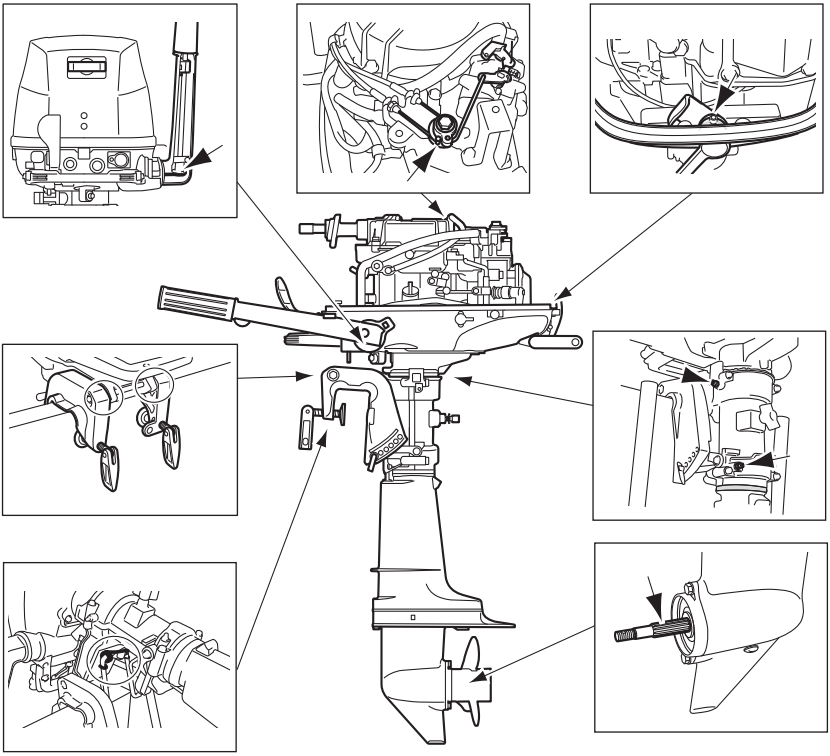

ENOF01519-1

ENOM00100-A

3. Off-season storage

ENOW00934-0

⚠ WARNING

- **Be sure to disconnect fuel connector except when operating engine.**
- **Fuel leakage is a fire or explosion hazard, which can cause serious injury or death.**

ENOW00097-0

⚠ WARNING

Be sure to use cloth to remove fuel remaining in the cowl and dispose of it in accordance with local fire prevention and environment protection regulations.

Before you put your outboard motor in storage, it is a good opportunity to have it serviced by your dealer.
Be sure to use fuel stabilizer while running the motor before storage. (See page 64)

ENOM00101-A

Engine

1. Wash the engine exterior and flush the cooling water system thoroughly with fresh water. Drain the water completely.
   Wipe off any surface water with an oily rag.
2. Remove the fuel hose from the outboard motor or close the fuel cock.
3. Drain all fuel from the fuel hoses, fuel pump and carburetor (See page 64), and clean these parts.
   Keep in mind that if gasoline is kept in the carburetor for a long time, gum and varnish will develop, causing the float valve to stick, restricting the fuel flow.
4. Remove the spark plug and put a teaspoon of engine oil or spray storage oil into the combustion chamber through the spark plug holes.
5. Pull the recoil starter several turns to lubricate inside the cylinder.

ENOW00930-1

⚠ WARNING

- **Be sure to remove stop switch lock to prevent the spark plug(s) from igniting.**
- **Put a cloth to spark plug hole and wipe up any spilled engine oil, when cranking the outboard motor.**

6. Change the engine oil (See page 55).
7. Change the gear oil in the gear case (See page 57).
8. Apply grease to grease point (See page 62).
9. Place the outboard motor in the vertical position under a dry condition.

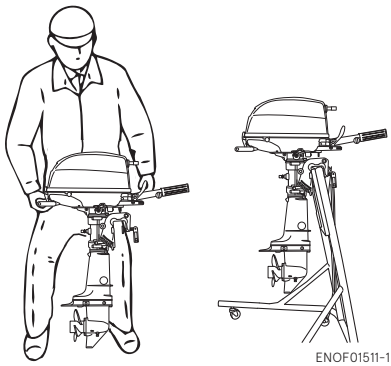
ENOF01511-1

ENOW00066-1

⚠ CAUTION

- **Do not give a shock to an outboard motor during transportation.**
- **Do not carry or store outboard motor in any of positions described below.**

Otherwise, engine's exterior may be damaged or water may enter the cylinder through the exhaust port and cause engine problems.

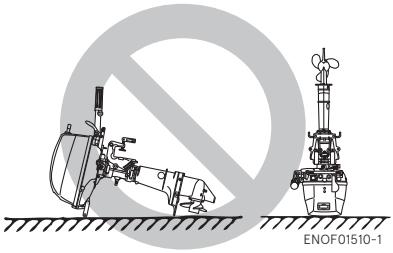

ENOF01510-1

ENOM00441-0

If the outboard motor must be laid down, be sure to drain the remaining fuel in the fuel line and carburetor (see page 64). When laying down the outboard motor, place front-side, starboard-side, or port-side down on a cushion or any softer surface shown below.

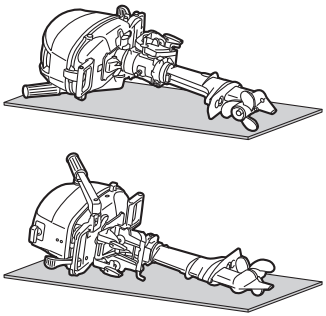

ENOF01532-0

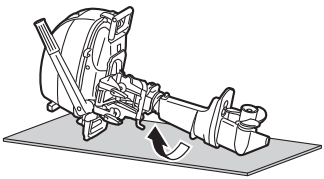

ENOF01533-0

ENON00941-0

Note

When laying the outboard front-side down, turn the clamp bracket 90° clockwise or anti-clockwise so that it does not interfere with the ground. Then tighten up the steering adjustment screw to maintain its position (see page 47).

ENOM00950-0

Adding a fuel stabilizer

When adding a fuel stabilizer additive (commercially available), first fill the fuel tank with fresh fuel. If the fuel tank is only partially filled, air in the tank can cause the fuel to deteriorate during storage.

1. Before adding fuel stabilizer additive, drain the carburetor (See page 64).
2. Follow the instructions on the label when adding the fuel stabilizer additive.
3. After adding the additive, let the outboard motor run in the water for 10 minutes to make sure any old fuel in the fuel system has been completely replaced by the fuel with additive.
4. Turn the engine OFF

ENON00891-1

Note

If your motor is used occasionally, it is recommended to use a high quality fuel stabilizer for the fuel and keep the fuel tank full to reduce condensation and evaporation.

ENOM00970-0

Fuel system draining

ENOW00028-A

⚠ WARNING

For details on handling fuel, contact an authorized dealer.

Fuel and fuel vapors are extremely flammable and can be explosive.

- **If fuel is spilled, wipe it up immediately.**

- **Keep the fuel tank well away from sources of ignition, e.g. sparks or open flames**
- **Perform all work outdoors or in a well ventilated place.**

ENOW00097-0

⚠ WARNING

Be sure to use cloth to remove fuel remaining in the cowl and dispose of it in accordance with local fire prevention and environment protection regulations.

1. Disconnect the fuel hose from the outboard motor (separate fuel tank).
   Turn off the fuel cock (integral fuel tank).
2. Remove the top cowl.
3. Place an approved fuel container under the drain screw and use a funnel to avoid spilling fuel.
4. Loosen the carburetor drain screw.
5. Tilt up the outboard motor until fuel flows out of the drain hole.
6. Leave the outboard motor in this position until all fuel has been drained.
7. When thoroughly drained, retighten the drain screw securely.
8. Check the drained fuel for the presence of water or other contaminants. If either is present, refill the carburetor with fuel, and then drain the fuel again. Repeat this procedure until no water or other contaminants are present in the drained fuel.

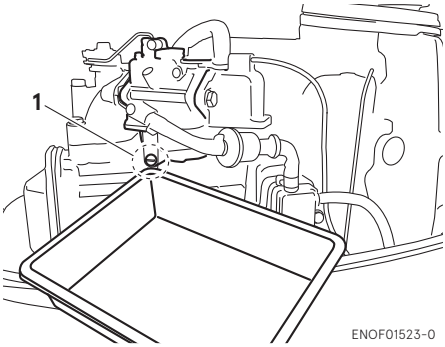

1. Carburetor drain screw

ENOM00102-0

Battery

ENOW00931-A

⚠ WARNING

- **Place the battery away from any source of fire, sparks and open flames such as burners or welding equipment.**
- **Place the battery away from fuel tank. Accidental sparks of battery may cause explosion of fuel.**

1. Disconnect the battery cables and be sure to remove the negative terminal first.
2. Wipe off any chemical deposits, dirt, or grease.
3. Apply grease to the battery terminals.
4. Charge the battery completely before storing it for the winter.
5. Recharge the battery once a month to prevent it from discharging and the electrolyte from deteriorating.
6. Store the battery in a dry place.

ENOM00104-A

4. Pre-season check

The following steps must be taken when first using the engine after off-season storage.

1. Check that the shift and throttle function properly. (Be sure to turn the propeller shaft when checking the shift function or else the shift linkage may be damaged.)
2. Check the electrolyte level, and measure the voltage and specific gravity of the battery.

Specific Gravity at 20°C	Terminal Voltage (V)	Charge Condition
1.120	10.5	Fully discharged
1.160	11.1	1/4 charged
1.210	11.7	1/2 charged
1.250	12	3/4 charged
1.280	13.2	Fully charged

3. Check that the battery is secure and the battery cables are properly installed.
4. Change the engine oil (See page 55).
5. Before starting the engine, disconnect stop switch lock and crank approximately 10 times in order to prime the oil pump.
6. Fill fuel tank completely.
7. Start the engine and warm up the engine for 3 minutes in the "NEUTRAL" position.
8. Run the engine for 5 minutes at the slowest speed.
9. Run the engine for 10 minutes at half throttle. The oil used for storage inside the engine will be circulated out to assure optimum performance.

ENOM00105-C

5. Submerged outboard motor

ENOW00098-0

⚠ CAUTION

Do not attempt to start submerged outboard motor immediately after it is recovered, or engine could be severely damaged.

After taking your outboard motor out of the water, immediately take it to your dealer.

The following are the emergency measures to be taken for a submerged outboard motor.

1. Wash the outboard motor with fresh water to remove salt or dirt.
2. Remove the engine oil drain screw and completely drain water and oil from the engine.
3. Remove the spark plug, and completely drain the water from the engine by pulling recoil starter several times.
   Replace oil to the correct level.
   The oil and filter may need to be changed again after running a short period to get all moisture completely out of the crankcase.
4. Inject a sufficient amount of engine oil through the spark plug holes.
   Pull the recoil starter rope several times to circulate the oil throughout the outboard motor.

ENOM00106-1

6. Cold weather precautions

If you moor your boat in cold weather at temperatures below 0°C (32°F), water residue in water pump may freeze and may damage the pump, impeller, etc. To avoid, submerge the lower half of the outboard motor into the water.

ENOM00107-A

7. Striking underwater object

ENOW00935-0

⚠ CAUTION

Striking the sea bottom or an underwater object may severely damage the outboard motor.

Follow the procedure below and consult a dealer as soon as possible.

1. Stop the engine immediately.
2. Check the control system, gear case, boat transom etc.
3. Return to the nearest harbor slowly and carefully.
4. Consult a dealer check the outboard motor before operation again.

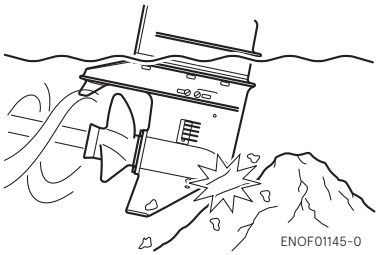

ENOF01145-0

ENOM00120-2

8. Auxiliary outboard motor operation

When the auxiliary outboard motor is not in operation, be sure to remove the stop switch lock, shift into forward, and then tilt the outboard motor up. Otherwise, over-rotation of the propeller due to water spray and water ingestion that could cause damage to the outboard motor.

TROUBLESHOOTING

ENOM00109-0

If you encounter a problem, check the list below to determine the cause and to take the proper action.
An authorized dealer will always be happy to provide any assistance and information.

	Engine failing to start	Engine starting but stopping soon	Poor idling	Poor acceleration	Engine speed abnormally high	Engine speed abnormally low	Boat speed low	Overheating of engine	Warning lamp ON	Possible cause
FUEL SYSTEM	●	●								Empty fuel tank
	●	●	●	●		●	●	●		Incorrect connection of fuel system
	●	●	●	●		●	●	●		Air entering fuel line
	●	●	●	●		●	●	●		Deformed or damaged fuel hose
	●	●	●	●		●	●	●		Closed air vent on fuel tank
	●	●	●	●		●	●	●		Clogged fuel filter, fuel pump, or carburetor
			●	●		●	●	●		Use of improper engine oil
	●	●	●	●			●	●		Use of improper gasoline
	●	●	●	●						Excessive supply of fuel
	●	●	●	●		●	●	●		Poor carburetor adjustment
ELECTRICAL SYSTEM	●	●	●	●		●	●	●		Spark plug other than specified
	●	●	●	●		●	●			Dirt, soot, etc. on spark plug
	●	●	●	●		●	●			No Spark or weak spark
	●									Short circuit of engine stop switch
	●		●	●		●	●			Ignition timing incorrect
	●									Lock plate not fitted
	●									Disconnection of wire or loose ground connection
COMPRESSION & OIL SYSTEM	●	●	●	●		●	●			Low compression
			●					●		Carbon deposits in the combustion chamber
	●	●	●	●		●	●			Incorrect valve clearance
						●		●		Low oil pressure/level
ENGINE OIL SYSTEM						●		●	●	Low oil level
								●	●	Use of improper oil
						●		●	●	Oil deterioration
						●		●	●	Clogged oil strainer
						●		●	●	Faulty oil pump

	Engine failing to start	Engine starting but stopping soon	Poor idling	Poor acceleration	Engine speed abnormally high	Engine speed abnormally low	Boat speed low	Overheating of engine	Warning lamp ON	Possible cause
OTHERS	●		●	●		●	●			Incorrect adjustment of throttle link
							●	●		Insufficient cooling water flow, clogged or defective pump
			●				●	●		Faulty thermostat
				●	●		●	●		Cavitation or ventilation
				●	●	●	●	●		Incorrect propeller selection
			●	●	●	●	●	●		Damaged or bent propeller
				●	●		●	●		Improper thrust rod position
				●	●	●	●	●		Unbalanced load on boat
				●	●	●	●	●		Transom too high or too low

ACCESSORIES KIT

ENOM00562-1

The followings are a list of the tools and spare parts provided with the motor.

Items		Quantity	Remark	
Service tools	Tool bag	1		
	Pliers	1		
	Socket wrench	1	10 × 13 mm	
	Socket wrench	1	16 mm	
	Socket wrench handle	1		
	Screwdrivers	1	Cross-and straight-point	
	Screwdriver handle	1		
Spare parts	Emergency starter rope	1	1000 mm	
	Spark plug	1	NGK: DCPR6E	
	Split pin	1		
	Stop switch lock	1		
Parts Packaged with Engine	Fuel tank	1	12 L	Separate fuel tank model only
	Primer bulb	1 set		

PROPELLER TABLE

ENOM00438-0

Use a genuine propeller.

A propeller must be selected so that the engine RPM measured at wide open throttle while cruising is within the recommended range.

4: 4500–5500 min^{-1} (rpm)
5: 4500–5500 min^{-1} (rpm)
6: 5000–6000 min^{-1} (rpm)

	Propeller Mark	Propeller Size (Diameter × pitch)		Standard propeller on the model		
		in.	mm	4	5	6
Light boats	9	7.9 × 9.0	200 × 229			
	8	7.8 × 8.0	198 × 203		S, L	S, L
	7	7.8 × 7.0	198 × 178	S, L		
Heavy boats	6	7.9 × 6.0	200 × 152			*UL

S: Short shaft
L: Long shaft
UL: Extra long shaft
*: SP model

MEMO

MEMO

MEMO

MEMO

OWNER'S MANUAL

MFS 4D
MFS 5D
MFS 6D

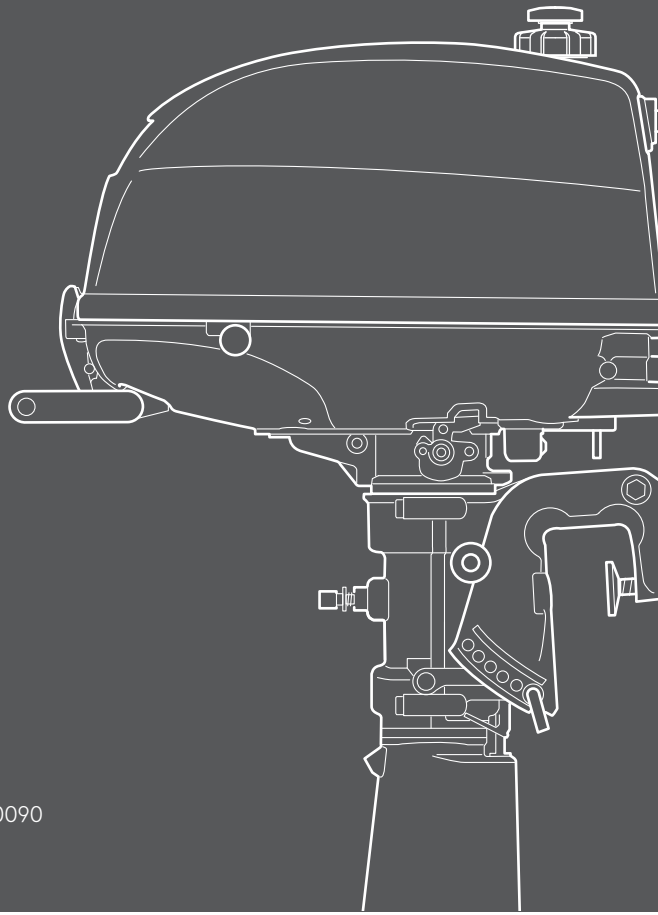

TOHATSU CORPORATION

5-4, Azusawa 3-Chome, Itabashi-Ku
Tokyo 174-0051, Japan
Tel: +81-3-3966-3117 Fax: +81-3-3966-0090
www.tohatsu.com